SCHNEEBERGER

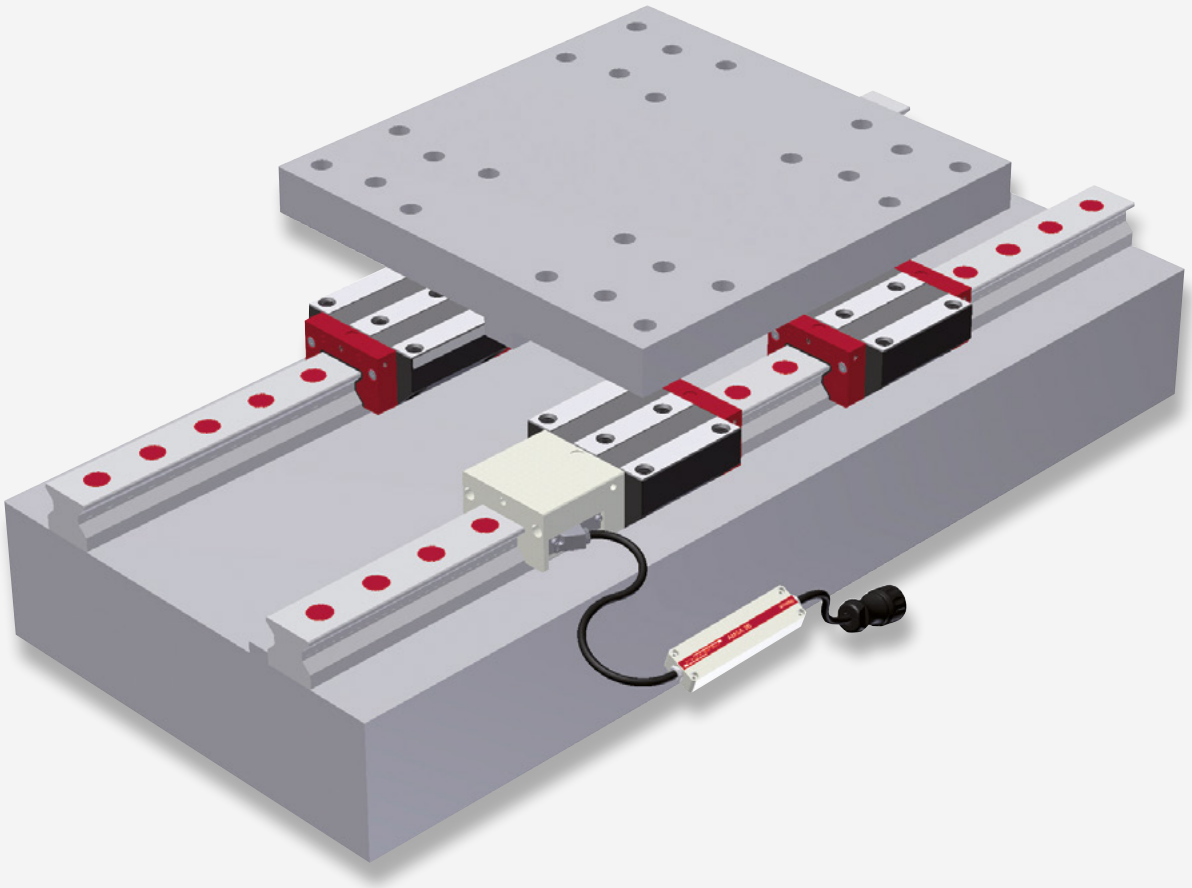

MONORAIL and AMS

Profiled linear guideways and integrated measuring systems

Application catalog

The present MONORAIL and AMS application catalogue is intended for general design purposes. It supplements the general catalogues:

MONORAIL and AMS product catalogue
MONORAIL and AMS installation instructions

with extensive information and know-how for sales and application recommendations. The application catalogue is available in a printed version or electronically in the "Download section" accessible from the SCHNEEBERGER home page at www.schneeberger.com.

All geometric dimensions and performance data such as load capacities and speeds should be taken from the MONORAIL and AMS product catalogue. The standard products can also be viewed there.

The application catalogue essentially describes the MR and BM product series as well as the AMS measuring systems under the name of "SCHNEEBERGER MONORAIL guideways". The content is structured in the following sections: Technical principles, development and design, storage and transport, commissioning and operation, maintenance and servicing of products. The areas of expertise of guiding, driving and measuring are described separately within these sections.

SCHNEEBERGER GmbH
75339 Höfen/Enz

User guidelines

This publication has been produced with great care and all information has been checked for its accuracy. No liability can, however, be accepted for erroneous or incomplete details. We reserve the right to make changes to the information and technical data for the purposes of the continuous development of our products. Reprinting or copying, including extracts, is not permitted without our written approval.

Symbols used

Notes

Note
➡ Notes and recommendations are set out here

Warning note

Keyword

Nature and source of the danger
➡ Consequences in the event of a failure to observe the warning.
➡ Measures to prevent damage.

Warning notes are categorised as follows using the keyword:

- **Warning**
  Means that there is a danger of serious injury or serious damage to property if the stipulated precautionary measures are not taken.
- **Caution**
  Means that there is a danger of minor injury or damage to property if the stipulated precautionary measures are not taken.

Additional literature

- MONORAIL and AMS product catalogue
- Interpolation and digitizing electronics SMEa operating instructions
- AMSA-3L installation instructions/software instructions
- Installation instructions for the BAC cover strip for MONORAIL BM
- Installation instructions for the MAC cover strip for MONORAIL MR
- Installation instructions for MRS/BRS brass plugs for MONORAIL MR/BM
- MONORAIL and AMS installation instructions
- Installation instructions for SPL lubrication plate for MONORAIL
- Installation instructions for the MRZ steel plugs for MONORAIL MR
- Installation notes for ASM metal wipers
- Installation notes for MONORAIL MR and BM carriages
- Installation notes for MONORAIL MR 100 carriages
- Installation notes for MONORAIL BM2G
- Installation notes for MONORAIL BZ

Product catalogues and installation instructions can be obtained from a SCHNEEBERGER agent or downloaded from www.schneeberger.com.

1	Technical Data: Guiding	7
1.1	SCHNEEBERGER profile rail guideways	10
1.2	Construction of a profile rail guideway	15
1.3	Load carrying capacity	23
1.4	Preload	28
1.5	Rigidity	30
1.6	Accuracy	31
1.7	Service life calculation principles	36
1.8	Sealing system	37
1.9	Build-up of noise	40
1.10	Lubrication	42
2	Technical Data: Driving	47
2.1	Integral rack drive BZ	50
2.2	Lubrication	53
3	Technical Data: Measuring	55
3.1	Distance measuring systems	58
3.2	Interfaces	73
4	Development and design: Guiding	81
4.1	Factors influencing the choice of product	85
4.2	Ball to Roller comparison	86
4.3	Guide rail types	88
4.4	Carriage types	93
4.5	Preload	97
4.6	Accuracy	100
4.7	Installation methods for guide systems	106
4.8	Calculation and sizing	109
4.9	Attaching the guide rail	119
4.10	Multi-part guide rails	125
4.11	Fastening carriages	126
4.12	Configuration of the connecting structure	130
4.13	Lubrication	137
4.14	Seal	152
4.15	Corrosion protection	161
4.16	Additional functionality of clamps and brakes	165
4.17	SCHNEEBERGER Download and On-line CAD catalogue	167

5	Development and design: Driving	169
5.1	Product overview	172
5.2	Calculation and sizing	175
5.3	Attaching the guide rail	180
5.4	Multi-part guide rails	183
5.5	Configuration of the connecting structure	184
5.6	Lubrication	187
6	Development and design: Measuring	189
6.1	Integration	192
6.2	Product overview	193
6.3	Factors influencing the choice of product	197
6.4	Arrangement of the measuring systems	200
6.5	Operating conditions	205
6.6	Shielding	206
7	Storage and transport	209
7.1	Delivered condition	212
7.2	Storage	213
7.3	Transport	214
8	Commissioning	217
8.1	Guideway check list	220
8.2	Measuring system check list	222
9	Operating, maintenance and service	223
9.1	Wipers	226
9.2	Influencing factors on operating conditions	230
9.3	Precautionary measures	231
9.4	24 hour delivery service	232

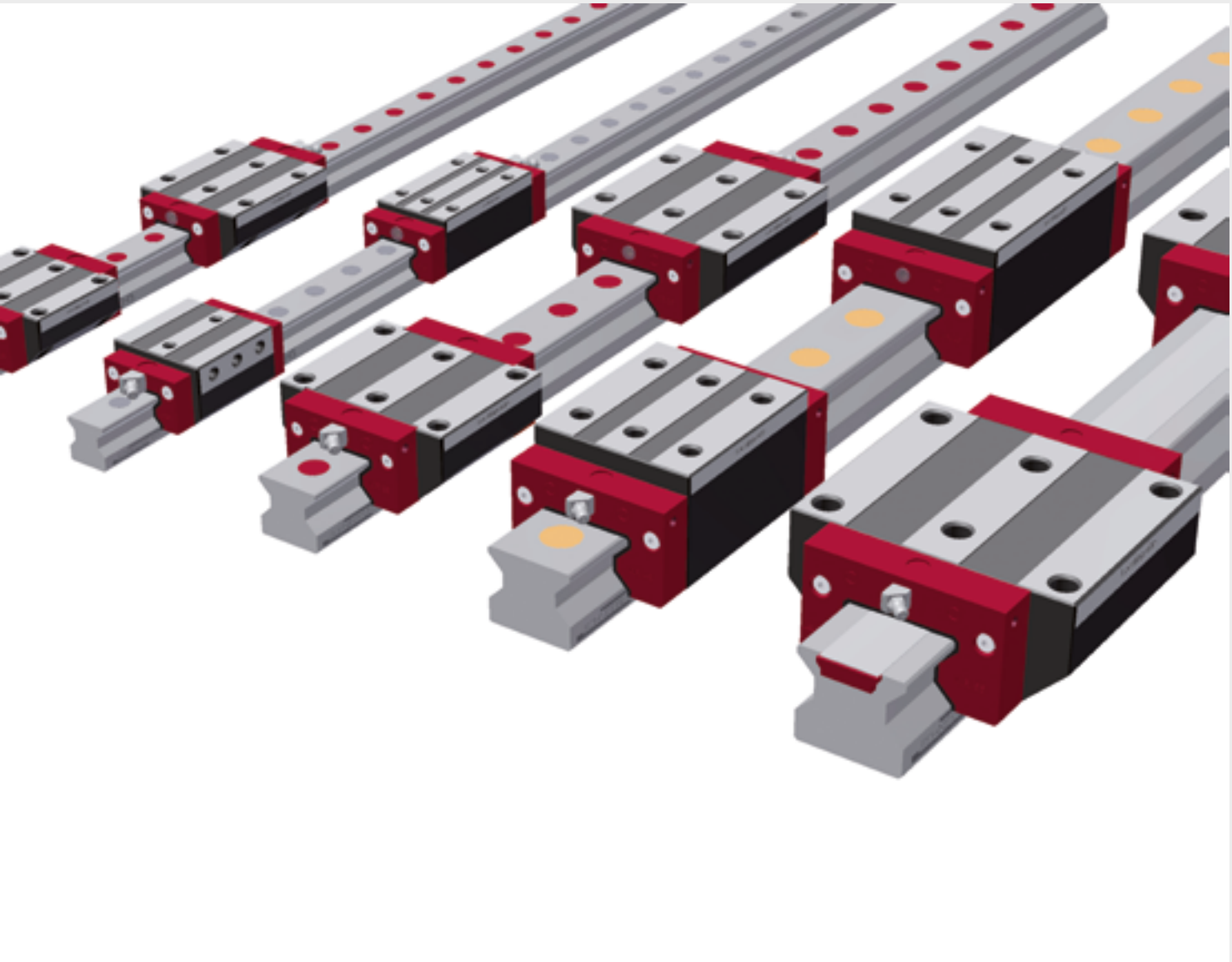

SCHNEEBERGER
LINEAR TECHNOLOGY

1	**Technical Data: Guiding**	**7**
1.1	**SCHNEEBERGER profile rail guideways**	**10**
1.1.1	Types of linear guideway	10
1.1.2	Characteristics and advantages of SCHNEEBERGER MONORAIL guideways.	12
1.2	**Construction of a profile rail guideway**	**15**
1.2.1	Carriage and guide rail	15
1.2.2	Individual components and accessories	16
1.2.3	Types and design principles	18
1.2.4	Materials	21
1.2.5	Hardening process	21
1.3	**Load carrying capacity**	**23**
1.3.1	Load carrying capacity	23
1.3.2	Dynamic loading capacity C	23
1.3.3	Static loading capacity C_0	24
1.3.4	Static and dynamic moments	25
1.3.5	Load directions	26
1.4	**Preload**	**28**
1.4.1	Definition	28
1.4.2	Generating	29
1.4.3	SCHNEEBERGER MONORAIL guideways	29
1.5	**Rigidity**	**30**
1.5.1	Definition	30
1.6	**Accuracy**	**31**
1.6.1	Accuracy	31
1.6.2	Accuracy classes of SCHNEEBERGER MONORAIL guideways	31
1.6.3	Running accuracy	31
1.6.4	Influences on running accuracy	33
1.6.5	Measures to improve accuracy	35
1.7	**Service life calculation principles**	**36**
1.7.1	Definition of terms	36
1.7.2	Applicable standards	36
1.8	**Sealing system**	**37**
1.8.1	Function of seals	37
1.8.2	Types of seals	37
1.8.3	Friction of different seals	39
1.9	**Build-up of noise**	**40**
1.9.1	Definition	40
1.9.2	Causes	40
1.9.3	Measures to reduce noise	41
1.10	**Lubrication**	**42**
1.10.1	Function of the lubrication	42
1.10.2	Types of lubricant	42
1.10.3	Characteristics of the lubricants	43
1.10.4	Recommended lubricants	44
1.10.5	Indicators and additives for lubricants	44
1.10.6	Brief description of the lubricants in accordance with DIN 51502	45
1.10.7	Deciding factors in your choice of lubricant	46

1.1.1 Types of linear guideway

Linear guideways are used to enable precise straightline movements in machines and technical systems. Depending on the type, they are able to convey forces laterally to the direction of motion and moments. Linear guideways can be categorised according to the type of physical active principle in accordance with the following figure.

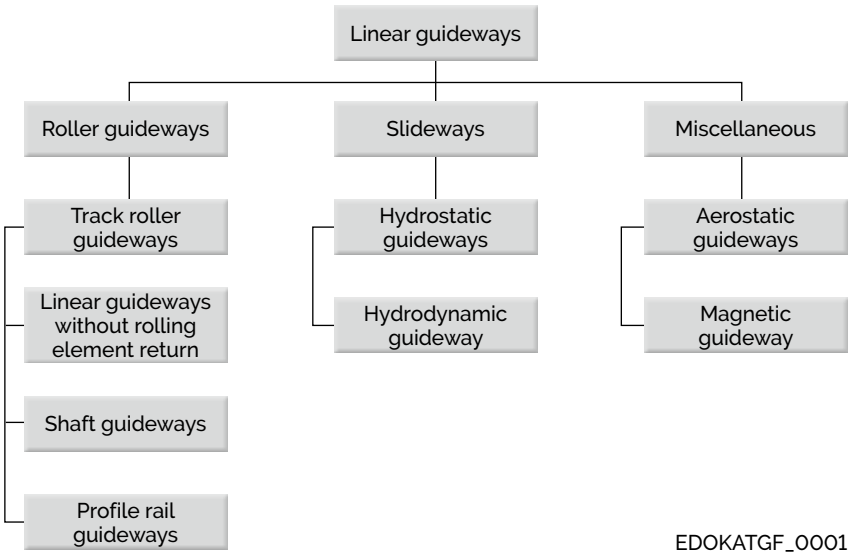

EDOKATGF_0001

Roller guideways can also be subdivided according to the type of rolling element movement within the guideways into roller guideways with and without a rolling element recirculating unit.
In the case of guideways without a rolling element recirculating unit, the stroke is limited by the length of the guiding components. Guideways with a rolling element recirculating unit, which include the SCHNEEBERGER profile rail guideways, have a theoretically unlimited stroke, which is only limited by the length of the guide rail.
The figure in the following section provides an overview of the roller guideways with corresponding products offered by SCHNEEBERGER.

SCHNEEBERGER profile rail guideways are compact, ready-to-install linear guideway systems, whose construction consists of a profile rail and a rolling element carriage with a sealed rolling element recirculating unit. Rollers or balls are used as rolling elements. Depending on the type, the guideways differ in terms of the number of tracks. They support low-friction and, due to preloaded carriages, both zero-backlash and precise longitudinal movement. In so doing they absorb forces from all directions laterally to the movement and moments around all axes. Thanks to the standardised main dimensions, the guideways of different manufacturers are interchangeable.
SCHNEEBERGER profile rail guideways, as the following figure shows, are able to fulfill other functions in addition to precise guiding, such as for example driving with integral racks and measuring through the integration of distance measuring systems.

EDOKATGF_0002

1.1.2 Characteristics and advantages of SCHNEEBERGER MONORAIL guideways.

Due to increasing competition, products need to be manufactured at ever more cost-effective prices and to even higher quality standards. This imposes stringent requirements in respect of production facilities and their guiding components, which are largely responsible alongside driving and control systems for the quality produced. Included amongst these requirements in respect of modern linear guideways are:

- High load carrying capacity and rigidity
- Consistent precision
- Zero-backlash
- Positive dynamic characteristics
- Ease of movement
- Cost-effectiveness
  - Low procurement costs
  - Simple installation and adjustment
  - Minimal maintenance overhead
  - Simple storage and spare parts procurement
  - Standardisation
  - Interchangeability
  - Extended service life
  - Added value through the integration of additional functions
- Environmental sustainability

SCHNEEBERGER MONORAIL guideways meet these requirements to a high level and thus offer definite advantages compared to hydrodynamic slideways.

Load carrying capacity and rigidity

Due to the design principle, in spite of their compact construction SCHNEEBERGER MONORAIL guideways are able to absorb high forces and moments from all directions. For this, load carrying capacity and rigidity essentially depend on the number of load-bearing rolling elements and their structural form.
Thanks to the larger contact surface between the rolling element and the track compared to ball guideways, roller guideways have a higher load carrying capacity and rigidity and are therefore able to absorb higher forces for a given size.

Consistent precision

With SCHNEEBERGER MONORAIL guideways, the rolling elements roll on the tracks without virtually any slippage. As a result, they are only subject to minimal wear, which is also aided by the fully standard sealing of the carriages. With proper use, the SCHNEEBERGER MONORAIL guideways retain their precision throughout their entire service life without the need to be re-adjusted or re-finished in any kind of way.
This of course presupposes that the following conditions are met:

- adequate lubrication
- protecting the guideways from abrasive particles using appropriate measures
- ensuring they are not overloaded
- protection from chemicals

Zero-backlash

The SCHNEEBERGER MONORAIL guideways are preloaded ensuring that the profile rail guideways are also free of backlash when subjected to forces. This means that the rolling elements do not lift off the tracks. Otherwise, as a result of the preload the rigidity of the system is affected, which in turn also affects the push force FV and service life.
The level of preload and thus the rigidity can be ordered on a per-application basis as a result of being able to select the preload class. The preload is generated during production by selecting the appropriate rolling element and does not need to be set during installation. The customer receives systems that are fully ready-for-use, which retain their preload throughout the entire operational period under the appropriate environmental conditions.

Dynamic characteristics

Modern SCHNEEBERGER MONORAIL guideways are ideally suited for highly dynamic applications and are decidedly superior to slideways in this respect. As a matter of principle, higher speeds and accelerations can be achieved with ball guideways than with roller guideways. This is related to the lower masses moved in the rolling element and to the simpler mechanism of guiding the balls on their cycle, as their orientation is not relevant for this.

Ease of movement

In addition to the sealing friction, SCHNEEBERGER MONORAIL guideways need to overcome to the rolling friction of the rolling element. Compared to slideways they demonstrate a significantly lower push force, which also only increases a lilttle as the speed increases, as indicated in the figure below. Otherwise there is no pronounced starting friction involving the stick-slip effect as with hydrodynamic slideways. As a result, high levels of positioning accuracy can be achieved and smaller drives can be used.

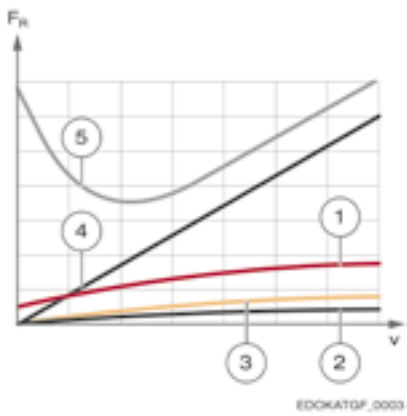

1 Roller guideway
2 Magnetic guideway
3 Aerostatic guideway
4 Hydrostatic guideway
5 Hydrodynamic guideway

F_R Friction force
v Speed

Speed vapplied against the friction force F_R.

Cost-effectiveness

SCHNEEBERGER MONORAIL guideways are standard machine components whose structural form, main dimensions and sizes are standardised. This guarantees the interchangeability of the systems of different manufacturers and saves purchasing and storage costs.

As the guideways are bolted on to the machine bed as complete units, the overheads for installation and adjustment are minimal. The configuration of the machine bed is also less complex than with slideways. Generally, all that is required is to mill the locating surfaces to achieve a high level of accuracy. Tracks do not necessarily need to be ground.

Integrating additional functions into the guideways offers another area of potential for increasing cost-effectiveness, as for example the SCHNEEBERGER products allow with BZ integral rack drive or AMS distance measuring system.

SCHNEEBERGER MONORAIL guideways are virtually maintenance-free with adequate lubrication and achieve a long service life. They retain their accuracy throughout their entire operating lifetime. Lubrication and replacement of parts subject to wear represent a minimal overhead.

This ensures that with SCHNEEBERGER MONORAIL guideways a high level of cost-effectiveness can be achieved compared with other types of guiding.

Environmental sustainability

The carriages for the SCHNEEBERGER MONORAIL guideways are compleately sealed wipers and in the rolling element recirculating units incorporate cavities, which act as lubricant repositories. As a result, particularly with grease lubrication, the loss of lubricant and thus the consumption of lubricant is minimal. In the case of roller guideways, unlike slideways, only an extremely thin film of lubricant is needed to separate the metal rolling contacts And as a result only a small amount of lubricant is needed for safe functioning, which means that the SCHNEEBERGER MONORAIL guideways demonstrate a high level of environmental sustainability.

The positive environmental sustainability of SCHNEEBERGER MONORAIL guideways is also exhibited in the disposal of the products. Simple separation of the different materials is thus guaranteed, and so steel and plastic can be recycled.

1.2.1 Carriage and guide rail

SCHNEEBERGER MONORAIL guideways consist of guide rails and carriages, in which there are rolling elements. The rolling elements run on tracks enclosed in the carriage and thereby allow unlimited linear motion of the carriages on the guide rail. The rolling element tracks are divided into a load zone and into an unloaded area, which is made up of areas for changing direction and returning and ensures that the rolling elements are returned to the start of the load zone.

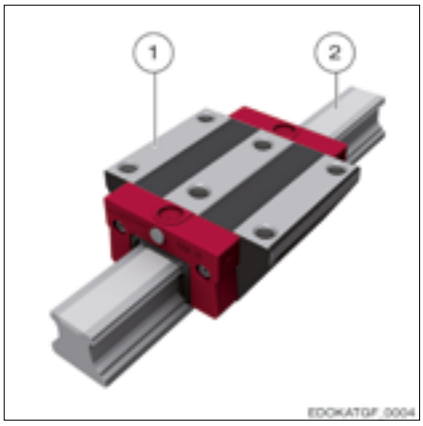

Carriage and guide rail:
1 Carriage
2 Guide rail

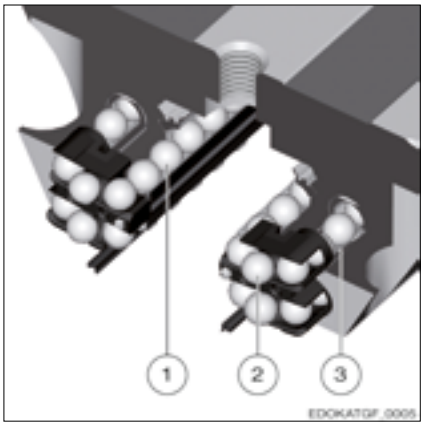

Rolling element recirculating unit in the carriage:
1 Force zone
2 Redirection unit
3 Returning

Reference surfaces and attaching

SCHNEEBERGER MONORAIL guideways are attached to the surrounding structure by the underside of the guide rail, and the lateral locating surfaces. The supporting surface on the underside of the guide rail has been designed by SCHNEEBERGER to be the complete surface area to achieve the greatest possible rigidity in the join between the guide rail and the surrounding structure. Guide rails and carriages have several fixing holes for fastening using screws. These fixing holes are either designed as continuous fixing holes or tapped fixing holes.

The lateral locating surfaces are designed as standard to be single-sided and are used for lateral support and orientation against the connecting structure. Double-sided locating surfaces can also be supplied on request.

The quality of the installation and locating surfaces and their position in relation to one another influence the geometric precision and service life of the guideway. They are therefore precision-engineered to high quality standards.

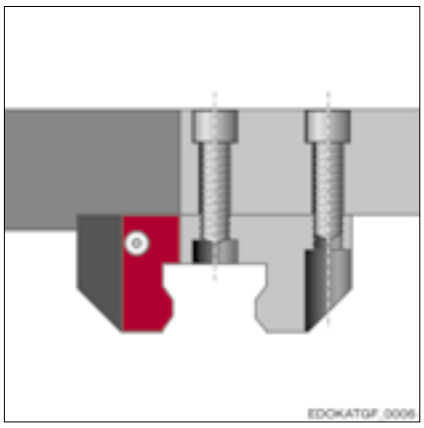

Use of the tapped fixing holes

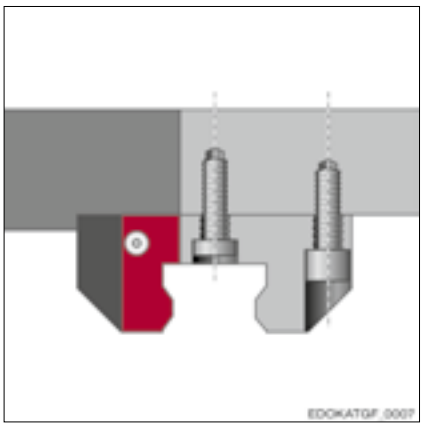

Use of the carriage fixing hole as continuous fixing hole

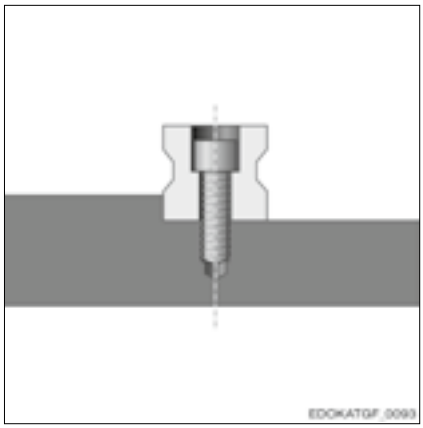

Guide rail with continuous fixing hole

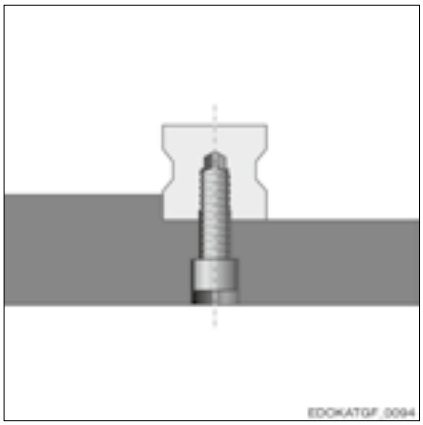

Guide rail with tapped fixing hole from below

1.2.2 Individual components and accessories

The carriages for SCHNEEBERGER MONORAIL guideways are made up of several components. The core is the load-bearing body made of high-grade roller bearing steel with the fixing holes as well as the tracks and return fixing holes for the rolling elements.
Rollers or balls are used as rolling elements. These are also made of hardened roller bearing steel. Another component of the carriage body are the synthetic guide elements with their integral longitudinal wipers.
The redirection unit of the rolling element is also a component of the carriage body. The front plates have integral cross wipers for sealing the front of the carriage and are responsible for distributing lubricant within the carriage. Lube nipples or adapter pieces can be screwed in using connecting thread, by means of which the lubricant gets into the inside of the front plate and from there is distributed via c channels and directed to the rolling elements.
The carriages can be upgraded with accessories, such as additional wipers, metal wipers or lubrication plates, which are installed at the front in front of the front plates and support optional adaptation of the system to the application in question.
The guide rails like the carriages are made of roller bearing steel and are either hardened in the track zone or through hardened. Closures for the guide rail fixing holes in the form of caps or cover strips finish the guide rails.

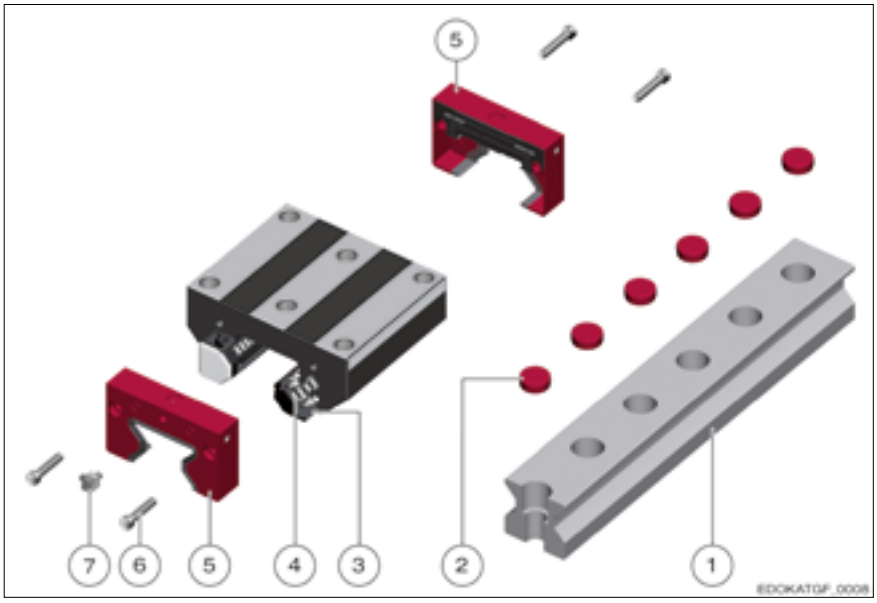

Basic equipment for a SCHNEEBERGER MONORAIL guideways in this example of a MONORAIL MR roller guideway:

1 Guide rail
2 Options for closing the fixing holes (e.g. plastic plugs)
3 Roller redirection unit
4 Rollers
5 Front plate
6 Screws
7 Lube nipple

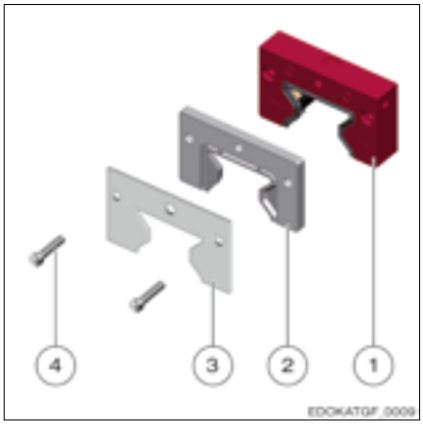

Accessories for a SCHNEEBERGER MONORAIL guideway based on the example of a MONORAIL MR roller guideway.

1 Lubrication plate (SPL)
2 Additional wipers (ZCN/ZCV)
3 Metal wipers (ASM)
4 Fastening screws

1.2.3 Types and design principles

Applicable standards
SCHNEEBERGER MONORAIL guideways are available in a wide range of sizes and types. To create a consistent standard for these machine components, the most important design elements have been compiled in the industry standard DIN 645 Part 1. In addition to the types, the standard defines the main dimensions and the accuracy classes for guide rails and carriages. The SCHNEEBERGER MONORAIL MR and BM products comply with this standard and are therefore interchangeable.
In addition to the standardised designs, SCHNEEBERGER also offers a wide range of other variants for special applications, such as for example special guide rail cross sections, guide rails with gear rack, short carriages or heavy load designs.

Important product standards

DIN 637
Technical safety specifications for dimensioning and operating profile rail guideways complete with rolling element recirculating unit

DIN 645 - Part 1:
Profile rails - roller guideways - Part 1: Dimensions for Series 1 to 3

DIN 645 - Part 2:
Profile rails - roller guideways - Part 2: Dimensions for Series 4

DIN ISO 14728 - Part 1:
Linear roller-contact bearings - Part 1: Dynamic loading capacities and nominal service life

DIN ISO 14728 - Part 2:
Linear roller-contact bearings - Part 2: Static loading capacities

ISO 12090 - Part 1:
Linear bearing with ball and roller recirculating unit - linear guideway - Part 1 Dimensions and tolerances for series 1, 2 and 3

ISO 12090 - Part 2:
Linear bearing with ball and roller recirculating unit - linear guideway - Part 2 Dimensions and tolerances for series 4 and 5

Individual components

DIN 5401:
Balls for roller-contact bearings and general industrial requirements

DIN 5402 - Part 1:
Roller-contact bearing components - Part 1: Cylindrical rollers

DIN 631:
Test conditions for experimental verification of the dynamic loading capacity of linear roller guideways with profiled rails and rolling element recirculating unit

Sizes

The size of the SCHNEEBERGER MONORAIL guideways is approximately equivalent to the guide rail base width in mm and can be derived from this. It also defines the main dimensions of the carriages and the fixing boreholes. The miniature guideways for sizes 7, 9, 12 and 15 are compiled in Part 2 of DIN 645 (dimensions for Series 4).

Arrangement of the rolling elements

The number of rows of rolling elements and the arrangement of the rolling elements depend in the case of profile rail guideways on the rolling element shape, the roller contact, the available installation space, the transmittable forces as well as other factors. There are guideways with two, four, six or more rows of rolling elements. In principle, the load carrying capacity and rigidity increase with the number of rows of rolling elements, although the push force and the design overhead also increase commensurately.
SCHNEEBERGER offers 4-row and 2-row guideways, as illustrated in the following overview:

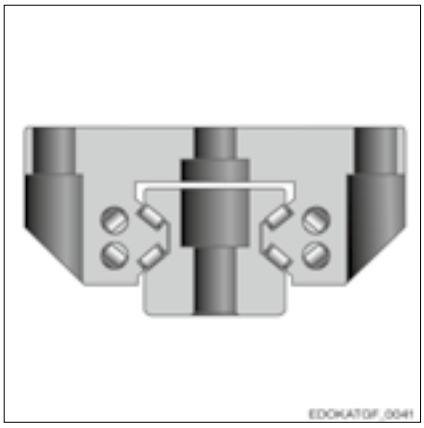

Type of guideway:
– SCHNEEBERGER MONORAIL guideways with rollers
Geometry:
– 4-row
– Linear contact
– O-geometry
SCHNEEBERGER products:
– MONORAIL MR
– MONORAIL AMS 3B
– MONORAIL AMSABS 3B
– MONORAIL AMSA 3L

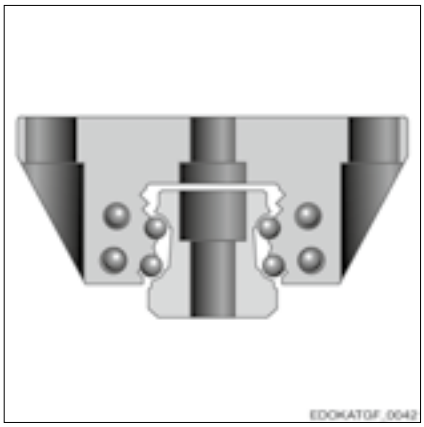

Type of guideway:
– SCHNEEBERGER MONORAIL guideways with balls
Geometry:
– 4-row
– 2-point contact
– O-geometry
SCHNEEBERGER products:
– MONORAIL BM
– MONORAIL BZ
– MONORAIL AMS 4B
– MONORAIL AMSABS 4B

O-geometry

A distinction is made between X- and O-geometry in the arrangement of the tracks of profile rail guideways. With the so-called O-geometry of the tracks, large internal spacings are achieved with rolling element tracks offset by 90°. As a result the guideways are able to consistently absorb high forces from all directions and relatively large moments around their longitudinal axis. In so doing they exhibit a higher torsional rigidity than with X-geometry.

Consequently, SCHNEEBERGER roller and ball guideways are designed using the favourable O-geometry.

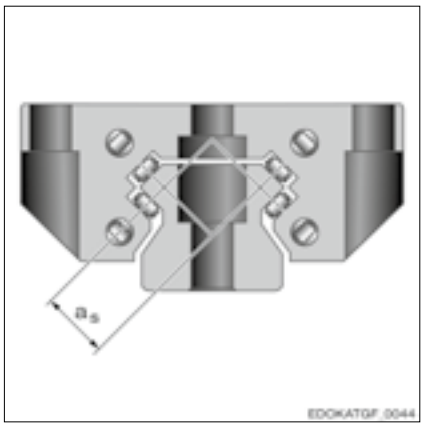

X-geometry with spacing a_s

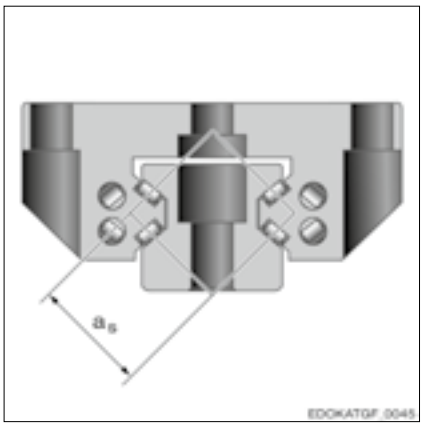

O-geometry with spacing a_s

Contact angle

With SCHNEEBERGER MONORAIL guideways the tracks are arranged at a particular angle so that they are able to absorb forces from different directions. This contact angle α is defined in accordance with DIN ISO 14728 as the angle between the direction of the force acting on the guideway and the line of influence of the resulting force, which is transmitted from a track on to a rolling element.
All SCHNEEBERGER MONORAIL guideways have a contact angle of α = 45° and can therefore simultaneously absorb large forces from all directions.

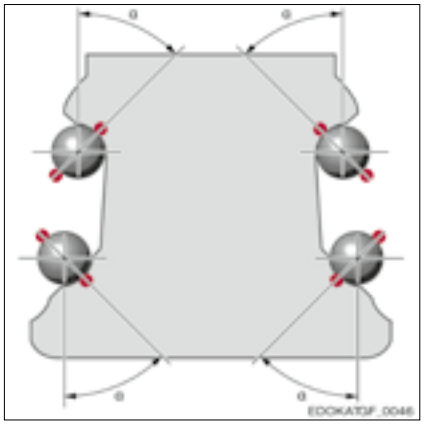

Contact angle of the rolling element with the guide rail.

1.2.4 Materials

High-grade tool steels and various high-grade plastics are used as materials for guide rails and carriages for SCHNEEBERGER MONORAIL guideways. Non-ferrous metals and aluminium are in part used for accessories.
The following table provides an overview of the mateirals used by SCHNEEBERGER:

Component	Materials
Guide rails	Roller bearing steel, tracks or complete guide rail hardened
Carriage body	Roller bearing steel, body, fully hardened
Rolling element	Roller bearing steel, hardened
Front plates	PAPA, injection moulded
Redirection units	POM and polyamide, injection moulded
Seals	TPU, injection moulded
Additional wipers	NBR or FPM (Viton) for the sealing lips, stainless steel for the carrier plate
Metal wiper	Stainless steel, non-corrosive
Plugs for guide rail	Stainless steel, brass, plastic (POM)
Cover strip for guide rail	Spring steel, non-corrosive
Reading head	Stainless steel, non-corrosive
Housing	Aluminium
Electronics housing	Aluminium
Lubricating accessories	Steel, galvanised, nickel-plated or yellow-chromatized

1.2.5 Hardening process

To achieve a sufficiently high load carrying capacity and long service life, in the case of profile rail guideways the surfaces in contact with the rolling element must exhibit a high level of surface hardness. For this purpose in the case of guide rails and carriages either the rolling element tracks alone or the complete guide rail and the complete carriage body are hardened.

Guide rails

Both guide rails with inductively hardened tracks and through hardened guide rails are offered by SCHNEEBERGER. As well as achieving sufficient load carrying capacity, a hard surface of the guide rails offers the following advantages compared with a supple surface depending on the application:

- Long service life of wipers
- Surface can be used as a running surface for protective covers (only fully hardened guide rails)
- Protection of the guide rail against incoming swarf (only fully hardened guide rails)

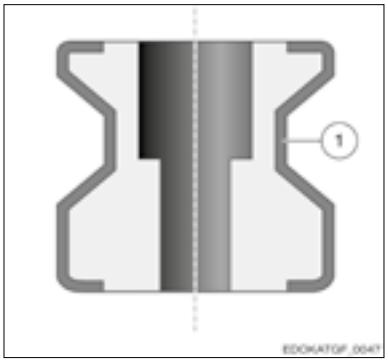

Inductively hardened guide rail with hardness zone (1) based on the example of an MR guide rail

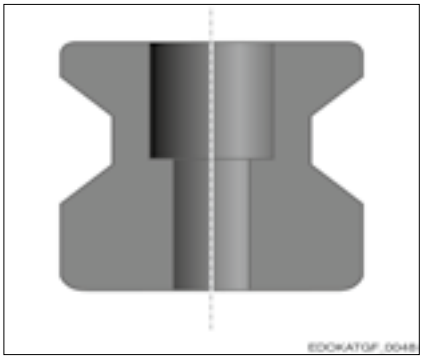

Fully hardened guide rail based on the example of an MR guide rail

Carriage

The steel bodies of the carriages are the critical element in achieving a long service life with a constant level of precision throughout the entire service life. To maintain these demanding requirements throughout the entire period of operation, even under extreme loads without plastic deformation of the carriage, SCHNEEBERGER uses high-grade roller bearing steel for all of its products. Not only the running surfaces but the complete cross-section of the carriage is hardened with this. Even when subjected to loads exceeding their recommended levels, SCHNEEBERGER carriages retain their factory-set characteristics as in principle no plastic deformation can occur.
Advantages of through hardened carriages:

- A high level of dimensional stability of the carriage body throughout its entire period of operation
- No plastic deformation of the carriage in case of overloading or a crash
- No undefined geometry errors and preload losses
- High level of force absorption up to breaking point
- Ground locating surfaces in the carriage cannot be damaged or scratched during transportation, storage, installation and commissioning.

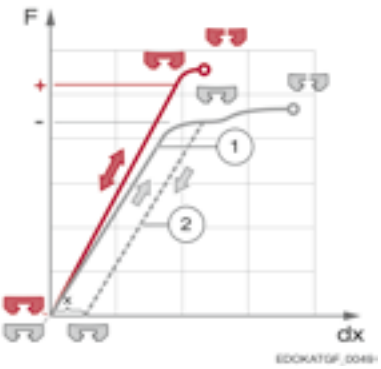

1 Loaded
2 Unloaded

red = fully hardened

grey = inductively hardened

Force F is applied against deformation dx up to breaking point.
In case of excessive loading an inductively hardened carriage is subject to plastic deformation; deformation x continues to occur.

1.3.1 Load carrying capacity

The load carrying capacity is an important criterion in selecting and designing SCHNEEBERGER MONORAIL guideways and a measure for their performance.
It is described by the key characteristics.

- Dynamic loading capacity C (N)
- Static loading capacity C_0 (N)

and the characteristics derived from these for the permissible moment load

- Dynamic longitudinal moment M_L (Nm)
- Dynamic transverse moment M_Q (Nm)
- Static longitudinal moment M_L (Nm)
- Static transverse moment M_{0Q} (Nm)

The individual values can be found in the SCHNEEBERGER MONORAIL and AMS product catalogue.

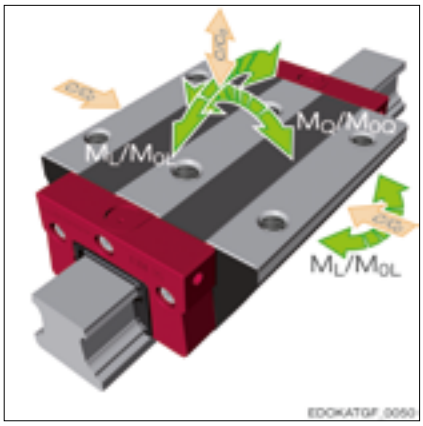

Moments (green) and load capacities (beige)

The load capacities indicate what force or load a guideway can absorb before it suffers permanent damage. The size of the load capacities is determined by the following factors:

- Number of load-bearing rows of rolling elements
- Number of load-bearing rolling elements per row
- Rolling element diameter
- Length of rolling element (for rollers)
- Contact angle
- Material
- Surface hardness of the tracks

1.3.2 Dynamic loading capacity C

The dynamic loading capacity C (N) is the force with which a linear guideway can theoretically cover a defined distance without exhibiting any signs of fatigue. In accordance with the standard DIN ISO 14728-1, this reference distance is 100 km. Forming the basis for the calculation is the statistical assumption that 90% of a sufficiently large group of linear guideways covers the 100 km route before any initial damage occurs to the rolling elements or tracks. The force in this is assumed to be constant in terms of time and position in the direction of pressure.
The dynamic loading capacity is the basis for calculating the service life of SCHNEEBERGER MONORAIL guideways. See also Section 4.10 - Calculations and sizing.
The individual values can be found in the SCHNEEBERGER MONORAIL and AMS product catalogue.

Conversion factors for C

Some manufacturers relate the dynamic load capacities in derogation of DIN ISO 14728 to a nominal service life of 50 km, as a result of which significantly higher load capacities occur compared to the DIN ISO values. To be able to compare the different values with one another, the respective values must be converted based on the following formulae.

$$C_{50} = 1{,}23 \cdot C_{100}$$ for roller-guideways

$$C_{50} = 1{,}26 \cdot C_{100}$$ for ball-guideways

EDOKATGF_0051

1.3.3 Static loading capacity C_0

The static loading capacity C0 (N) is also an important characteristic in the design of SCHNEEBERGER MONORAIL guideways. It is used for verifying the static reliability factor. According to the definition as per DIN ISO 14728-2, the static loading capacity C0 is the force at which plastic deformation of rolling elements and track occurs on a contact surface 0.0001 times the rolling element diameter.

The static loading capacity marks the load limit of the guideway when idle or during slow motion. During operation it is important to ensure that the guideway is never exposed to forces, which exceed the static loading capacity. This also applies in respect of short-lived events, such as vibrations or impacts.

The product-specific values are specified in the SCHNEEBERGER MONORAIL and AMS product catalogue.

The static loading capacity C0 exclusively relates to the deformation of the roller contact. The maximum permissible tensile load of a profile rail guideway is also, however, limited by the screw connections to the carriage and guide rail. See Section 4.11.7 - Attaching the guide rail - Permissible tensile forces and transverse torques.

Static reliability factor S0

The static reliability factor S_0 is a value for securing against unpermitted permanent deformations to rolling elements and tracks. It is defined as the ratio of the static loading capacity C_0 to the static equivalent force P_0.

$$S_0 = C_0 / P_0$$

S_0 static reliability factor
C_0 static loading capacity
P_0 static equivalent force

EDOKATGF_0052

Depending on the application in question and the operating conditions, appropriate safety factors are recommended for the static reliability factor. See Section 4.10 - Calculations and sizing.

1.3.4 Static and dynamic moments

The permissible static moment M_0 is a moment, which causes a load on the carriage, which corresponds to the static loading capacity C_0. The same applies correspondingly for the permissible dynamic moment M and the dynamic loading capacity C. The permissible dynamic moments are critical for the design of the guideway, in terms of the loading of the carriages with transverse moments M_Q and longitudinal moments M_L. Transverse and longitudinal moments increase the overall loading of the guideway and are to be taken into account accordingly in calculating the service life and static reliability factor S_0. See Section 4.10 - Calculations and sizing.
The height of the permissible longitudinal moments M_L essentially depends on the number of rolling elements per row and thus on the length of the carriage. Long carriages can therefore absorb higher moments than short ones. The loading of the individual bodies takes place in this from the outside towards the carriage centre. As well as the carriage length, the track spacing is critical for the height of the permissible transverse moments M_Q. The track spacing is higher in the case of the so-called O-geometry than in guideways with X-geometry. See Section 1.2 - Construction of a profile rail guideway
The static transverse moment M_{0Q} exclusively relates to the deformation of the roller contact. The maximum permissible transverse moment of a profile rail guideway is also, however, limited by the screw connection to the carriage and guide rail. See Section 4.11.7 - Attaching guide rails - Permissible tensile forces and transverse torques.

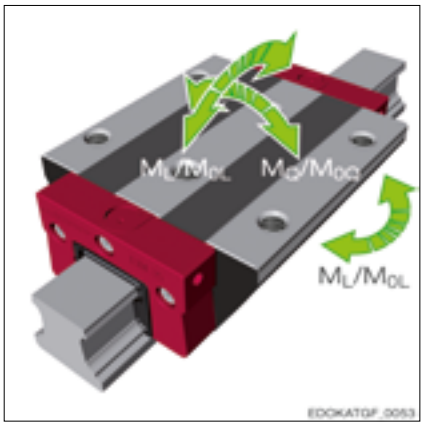

Moments, which act on the carriages.

In the SCHNEEBERGER MONORAIL guideways the four tracks are arranged at a 90° angle to one another. This results in producing for longitudinal moments an equally high loading capacity for moments around the transverse axis (M_L) and vertical axis (M_L). Thanks to the O-geometry of the guideways, a large track spacing and therefore high loading capacity is achieved for moments around the longitudinal axis (M_Q).
The individual values can be found in the SCHNEEBERGER MONORAIL and AMS product catalogue.

1.3.5 Load directions

Influence on the load capacities

The static (C_0) and dynamic (C) load capacities are specified in the SCHNEEBERGER MONORAIL and AMS product catalogue for the load directions tension/pressure/ lateral force.

If the guideways are loaded at a different angle, the load carrying capacity decreases. The reason for this is the internal absorption of force. Ideally the force of 2 tracks is absorbed. In the worst case scenario, for a load below 45°, only one track is bearing any load. The load carrying capacity thereby decreases to approximately 70% of its original value, thereby reducing the service life to almost 30%.

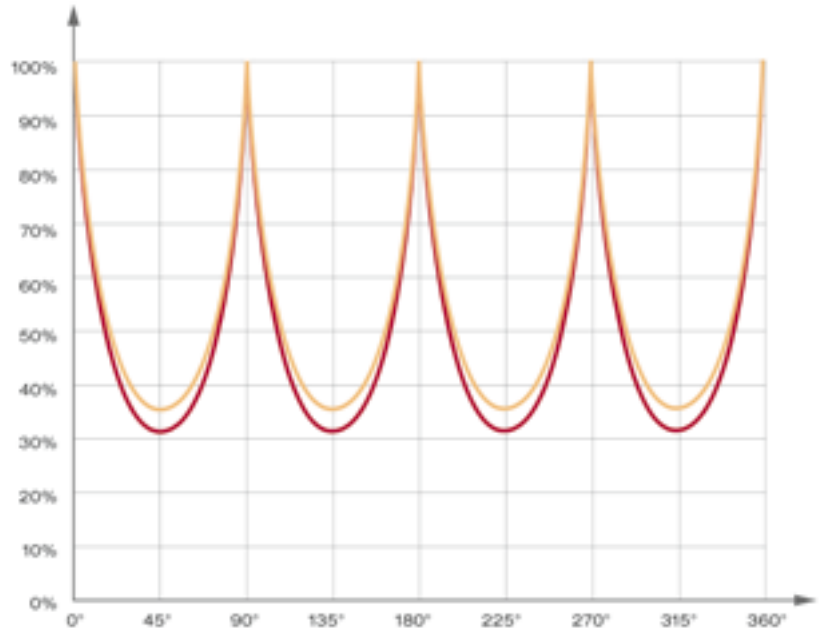

Influence of the direction of force on the service life as a %: Roller guideway MR (red) and ball guideway BM (yellow).

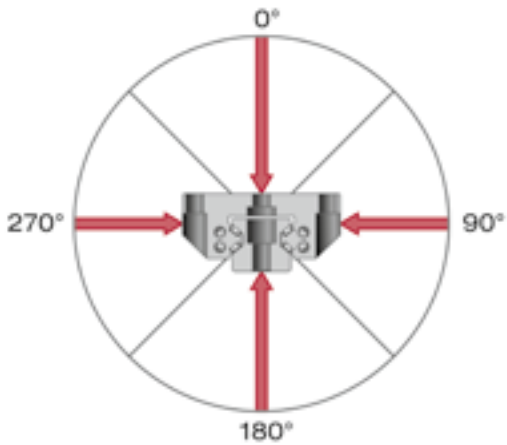

Influence on the service life

The load carrying capacity and the service life of the SCHNEEBERGER MONORAIL guideways depend on the load direction. When calculating the service life, this is taken into account using the combined equivalent force P.
In geometric terms, given a sloping direction of force, horizontal F_Y and vertical force components F_Z are cumulatively applied to the carriages by means of vector addition, in accordance with the figure below of the total load F_{res}:

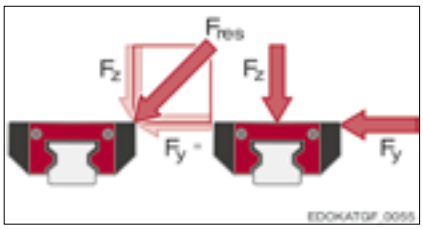

Vector addition of the horizontal F_Y and vertical F_Z force components for the total load F_{res}:

Conversely, given the equivalent force P the force components are arithmetically added using the

$$P = |F_Y| + |F_Z|$$

EDOKATGF_0056

P	equivalent force
F_Y	horizontal force component (force in the y-direction)
F_Z	vertical force component (force in the z-direction)

formula. The dynamic equivalent force is therefore always greater for forces, which are different from the main directions, than the actual force acting on the guideway. This procedure makes it possible to always use in the service life formula

$$L_{nom} = a_1 \cdot (C / P)^q \cdot 100km$$

EDOKATGF_0057

L_{nom}	nominal service life
C	dynamic loading capacity
P	equivalent force
a_1	service life adjustment factor
q	Exponent for the service life calculation = 10/3 in the case of roller = 3 in the case of ball

the dynamic loading capacity C while still taking into account the reduced load carrying capacity for an inclined load direction and the associated reduction in service life. See Section 4.10 - Calculations and sizing.
This loss of service life for inclined load can be significant as the ratio C/P is included in the calculation where the exponent q = 3. In the worst case scenario, for an acting force below 45° the service life is reduced by approximately 2/3 compared with the service life for a load in the main direction of force.

When constructing the axle it is therefore important to ensure that the guideway is arranged according to the predominant load direction to achieve the longest possible service life.

1.4.1 Definition

SCHNEEBERGER MONORAIL guideways exhibit an elastic deflection behaviour, which is not linear but degressive. That means that the rolling elements are relatively supple under minimal force and become more rigid with increasing force. The guideways are preloaded by the preload and so part of the elastic deformation has already been removed. Consequently, the rigidity of the overall system is increased.
The following figure shows the influence of preload on the deflection behaviour based on the example of a ball.

The preload
- Changes the rigidity and thus also the natural frequency of a guide system.
- Influences the travel pulsation of the carriage
- Increases the displacement resistance of the carriage
- Increases the load acting on the carriage and thus reduces the nominal service life. When calculating the service life the preload therefore needs to be taken into account as an additional force.

The selection of preload is thus always a compromise between rigidity, displacement resistance and service life and needs to be weighed up depending on the application. For this reason SCHNEEBERGER offers four different preload classes V0, V1, V2 and V3.

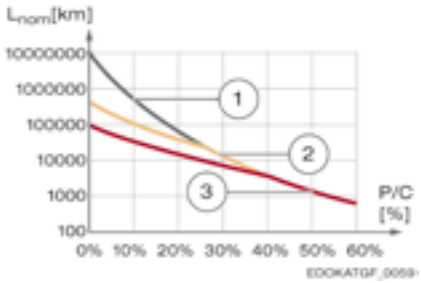

1 low preload, V1
2 medium preload, V2
3 high preload, V3

L_{nom} nominal service life
P equivalent force
C dynamic load capacity

Nominal service life as a function of preload and force based on the example of an MR 45 roller guideway. Ratio P/C (%) with equivalent force P (N) and dynamic load capacity C (N) is applied against the nominal service life L_{nom} (km).

1.4.2 Generating

The preload V in the carriage is created by using rolling elements with an interference fit. This means the rolling element diameter is bigger than the clearance between the guide rail and carriage by a few micrometers. As a result the flanks of the carriages are bent when being pushed on to a guide rail. The preload occurs due to the restoring force due to the elasticity of the carriage body. The magnitude of the preload force is set by selecting the corresponding rolling element diameter.

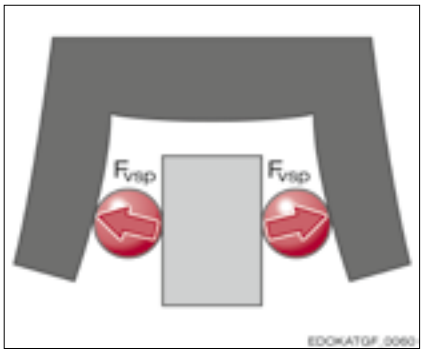

Preload force F_{vsp} generated by rolling elements, which acts against the carriage. The figure shows a finished ground carriage top.

1.4.3 SCHNEEBERGER MONORAIL guideways

Preload classes
SCHNEEBERGER offers three or four different preload classes for the MONORAIL guideways with roller and ball. See Section 4.5 - Preload.

Measuring preload
The preload not only generates a bulging of the flanks, but also a minor sag in the top of the carriage. This deformation of the top is proportional to the magnitude of the preload force and is therefore used to measure and check it.

Consistency of the preload

Caution

Preload loss due to deformation of the carriage

➡ To guarantee the preset preload following installation of the carriage, it is necessary to maintain the evenness specifications set out in this manual for the connecting structure. Otherwise it is possible that a loss of preload or an increase in preload occurs due to the deformation of the carriage when screwing tight.

One feature of the SCHNEEBERGER MONORAIL guideways is that the carriages have a level carriage top on any guide rail irrespective of the preload. Carriages with a different preload can be used on any guide rails. The set preload is maintained throughout.

1.5.1 Definition

The rigidity is a technical parameter, which describes the correlation between the external force acting on a body and the elastic deformation of the body. In the case of SCHNEEBERGER MONORAIL guideways the overall rigidity of the guideway is influenced by its components (guide rail, carriage and rolling element), and by the surrounding structure, the connection of the guideway with the machine bed and the axis slides. Rigidity is an important criteria in selecting SCHNEEBERGER MONORAIL guideways. It is specified in the SCHNEEBERGER MONORAIL and AMS product catalogue in the form of a diagram for the main force directions of tension and pressure. The diagram only takes into account the carriage/guide rail profile rail system.

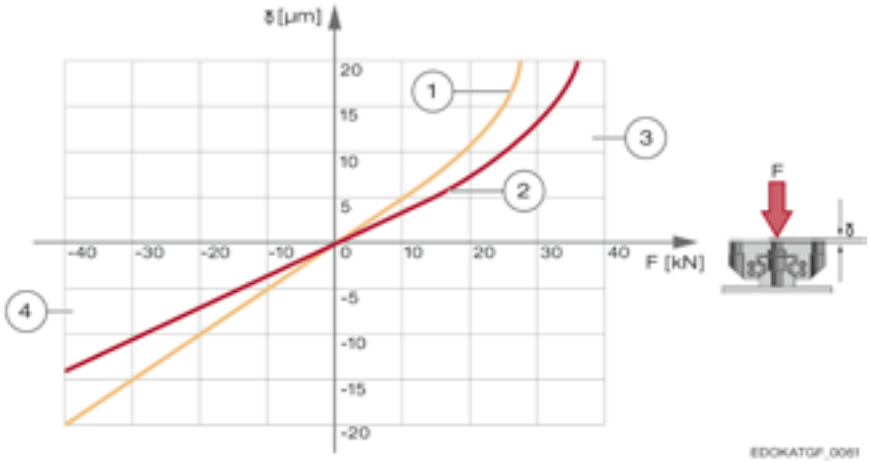

Deformation δ (µm) is applied against the load F (kN) and results in compressive rigidity or tensile rigidity.

Type:
1 MR W 45 A V3 and MR W 45 C V3
2 MR W 45 B V3 and MR W 45 D V3
3 Quadrant of tensile rigidity
4 Quadrant of compressive rigidity

δ Deformation
F Force

1.6.1 Accuracy

Together with the surrounding structure, the accuracy of the SCHNEEBERGER MONORAIL guideways essentially determines the accuracy of the overall machine and is therefore an important criterion for the choice of guideway. Depending upon the application different levels of accuracy are required. The higher the accuracy and stability of the guideway, the more stringent are the requirements in respect of the configuration of the location surfaces and the rigidity of the surrounding structure.

1.6.2 Accuracy classes of SCHNEEBERGER MONORAIL guideways

MONORAIL guideways are classified by SCHNEEBERGER into different accuracy classes. To do this both the tolerances of the reference dimensions of the carriages in relation to the guide rail and the running accuracy of the carriages over the guide rail length are defined. This allows the products to be best adapted to the necessary accuracy requirements of the application.

The tolerances of these dimensions are limited by SCHNEEBERGER in internal production specifications and thereby guarantee a high quality standard of the SCHNEEBERGER MONORAIL guideways in terms of customers' use and the interchangeability of the products.

1.6.3 Running accuracy

Ideally movement of the carriages along the guide rail takes place on a precisely straight track. Based on manufacturing tolerances, deviations from this ideal line do occur in which case the motion of the carriage is characterised by a total of 5 component errors. The vertical (XTZ) and horizontal (XTY) deviations are described by the running accuracy. Over and above this, however, rotary movements can also occur around all three axes (XRX, XRY and XRZ).

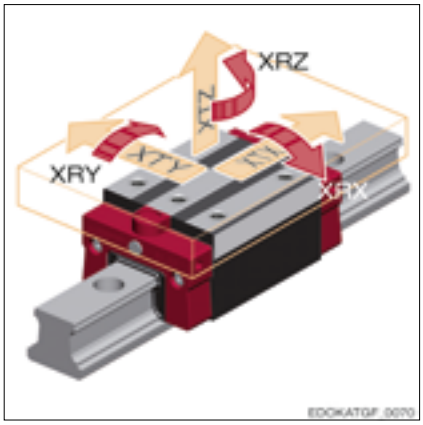

Rotational and translational movement of an individual carriage

Short description:

XRX	Rotational deviation around the x-axis
XRY	Rotational deviation around the y-axis
XRZ	Rotational deviation around the z-axis
XTX	Translational deviation in the x-direction (direction of motion)
XTY	Translational deviation in the y-direction
XTZ	Translational deviation in the z-direction

Definition of the short description for rotation:	X	R	X
Axis			
Component type (R = rotation)			
Rotating axis of rotation (rotation variation)			

Definition of the short description for translation:	X	T	X
Axis			
Component type (T = translation)			
Direction of deviation (translation variation)			

Effects of component errors

Illustrated based on the example of a machine axis. The geometric behaviour is determined by the component errors of the integrated linear guideways.
One axis of a machine usually consists of 4 carriages, which move on 2 guide rails and are connected with one rigid plate. The component errors for the individual elements then act on the axis so that 5 component errors for each axis in turn can occur.

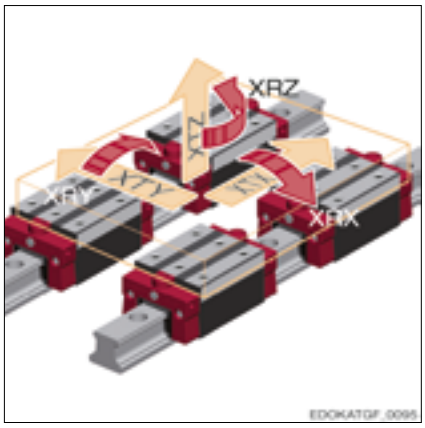

Rotational and translation movement of 4 connected carriages

If more axes are then connected with one another, the individual component errors will affect one another reciprocally.
For this reason it is important to keep the variations in each individual carriage as small as possible within the system.

1.6.4 Influences on running accuracy

The running accuracy of SCHNEEBERGER MONORAIL guideways is not only influenced by the production accuracy of the rolling element tracks in the guide rail, but by a variety of other factors. The variations, which result from this, can be categorised according to their pattern as follows.

Long-range variation:
- Geometry error in the guide rail tracks
- Geometry error in the location surfaces in the machine bed

Medium-range variation:
- Deformation of the guide rail due to screw forces
- Positional tolerances of the guide rail boreholes

Short-range variations:
- Travel pulsation of the carriages
- Butt transition joint with multi-component guide rails

Geometry error in the connecting structure

For a high level of accuracy in guiding it is critical that the location surfaces in the connecting structure also exhibit a high level of accuracy. The maximum vertical, lateral and parallel deviations in the guide rail requirements can be found in Section 4.14 - Configuration of the connecting structure.
Additional geometry errors are the result of the accuracy and rigidity of the machine bed, and/or of the general surrounding structure. Always adhere to the recommended installation tolerances here, and check the connection configuration in relation to rigidity.

Screw forces

The screw forces when installing the guide rail can lead to local instances of compression, the characteristics of which will depend on the tightening torques and on the geometric configuration of the guide rail. Compressions in the guide rail lead to a very small vertical rippling when running the carriage and thus in the spacing of the fixing boreholes. How great the effect of these compressions are on running accuracy, depends both on their size and also on the length of the carriage and the spacing of the fixing boreholes. Long carriages and small borehole spacings are more favourable than short carriages with large borehole spacings.
The screw tightening torque, and lubricating the screw heads are essential for reducing head friction as well as observing a consistent tightening torque. The tightening torque should only be set as high as is necessary for this.

Running accuracy when using multiple carriages and guide rails

In practical applications, the carriages and the guide rails are interconnected by means of saddles or machine beds. The other descriptions assume that these components are infinitely rigid. Once again we consider the overall movement of the system, in this instance in relation to the middle of the connecting plate (stands):

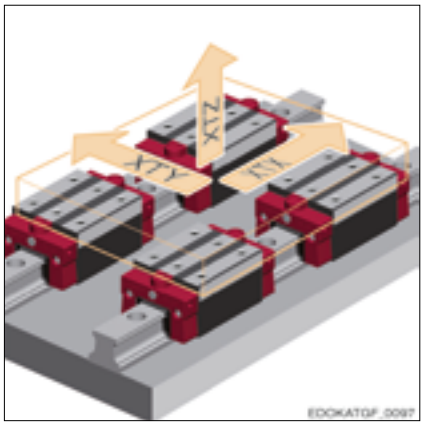

Translation movement of 4 connected carriages

The movements of the individual carriages in rotation XRX, XRY and XRZ are no longer visible in the overall system. The translations XTY and XTZ are reduced for standard spacings to approximately 1/5 of the original size.
The rotations and translations of the individual carriages take effect in the form of additional forces on the carriage tracks.

Travel pulsation

Travel pulsation is understood to mean movements of the carriage in the XTY and XTZ direction, which occur as a result of the periodic entry and exit of the rolling elements into the load-bearing zone. For this the number and location of the load-bearing rolling elements varies per track, which leads to pulsating oscillating forces in the carriage body.
Travel pulsation can be influenced by the carriage length L and the preload V of the carriage.
The following applies in this: A long carriage and a small preload V reduce travel pulsation.

With SCHNEEBERGER particular attention is paid to the rolling element recirculating units and the run-in areas in the steel body. These areas are geometrically configured to achieve a very smooth run with minimal travel pulsation and variation in push force and minimal generation of noise.

1.6.5 Measures to improve accuracy

The following list provides an overview of measures which can be used to promote a high level of running accuracy.

- The most rigid machine bed possible with precisely manufactured guide rail supporting surfaces
- Installation of the guideway with single-sided lateral reference
- Selecting a high accuracy class for the guideway
- Selecting guide rails with similar running behaviour (see matched systems in Section 4.6 -Accuracy)
- Selecting smaller borehole spacings in the guide rails
- Reducing the screw tightening torques (in so doing ensure sufficient load carrying capacity)
- Use of long carriages
- Axle configuration with two guide rails and in each case at least two carriages
- Large guideway spacings (track gauge) and carriage spacings

1.7.1 Definition of terms

The service life of a profile rail guideway is characterised by the distance, which can be covered under a specified load before the initial signs of material fatigue occur on the tracks or rolling elements of a linear guideway. The basis for the calculation is the dynamic loading capacity C, the equivalent force P and an exponent, which depends on the rolling element shape.

$$L_{nom} = (C / P)^q \cdot 100km$$

EDOKATGF_0077

L_{nom} nominal service life
C dynamic loading capacity
P equivalent force
q Exponent for the service life calculation
= 10/3 in the case of roller
= 3 in the case of ball

The graphic shows a nominal service life L_{nom} compared with the ratio C/P of roller guideway to ball guideway without the influence of preload and highlights the increased service life of a roller guideway compared with a ball guideway.

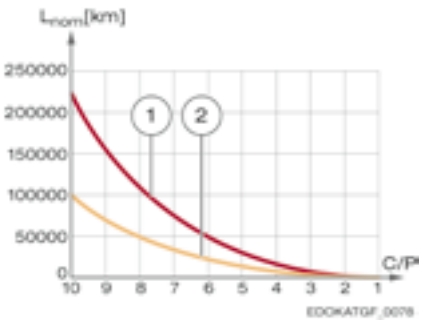

Service life of roller/ball guideway without the influence of preload
Ratio C/P is applied against the nominal service life L_{nom} (km).

1 Roller guideway
2 Ball guideway

L_{nom} nominal service life
C dynamic loading capacity
P equivalent force

Nominal service life L_{nom}
Nominal service life L_{nom} is understood to mean the calculated travelling distance, which is completed or exceeded by a sufficiently large gropu of identical linear guideways under identical operating conditions with an event probability of 90%, without material fatigue occuring.
Assuming no other requirements apply, all SCHNEEBERGER designs are shown as L_{nom} service life.

Operating life
The operating life is the actual lifetime achieved, which can vary greatly from the theoretical normal service life. The reasons for this can be, amongst others, external influences, operating conditions different from those assumed or faulty installation. See Section 6.4 - Operating conditions.

1.7.2 Applicable standards

The calculation of service life and the static and dynamic load capacities of linear guideways is descrbied in the standard DIN ISO 14728. The calculation procedure is derived from the rotary roller-contact bearings in accordance with DIN ISO 281.

1.8.1 Function of seals

Seals on SCHNEEBERGER MONORAIL guideways protect the carriages and rolling elements from penetration of foreign bodies in the form of solids or liquids and prevent the lubricant from discharging. Inadequate lubrication and contamination with dirt, swarf and cooling lubricants are by far the most common causes of premature wear and failure of SCHNEEBERGER MONORAIL guideways. To maintain the operability of the guideway over its calculated service life, other measures are required other than adequate lubrication. These include all-round sealing of the carriages, which is supported as required by additional protective devices such as telescopic covers and bellows. Using these the guideway should be protected from direct contact with foreign objects so that only small quantities of material can get on to the tracks. For optimal functionality of the guideway seals, several factors are critical:

- Fully functional configuration and installation of the wipers
- Supply of lubricant to the sealing lips, to prevent stick-slip effects, turning over of the sealing lips and wear.
- The smoothest possible wiping surface without projecting edges, e.g. using ground surfaces and using guide rails with fixings from below or using a MAC cover strip

1.8.2 Types of seals

Cross wipers

Cross wipers seal the carriages at the front in the direction of movement. The wipers are located on the two ends of the carriages and are double-lipped in design. A stable sealing lip points towards the outside of the carriage and is used to wipe away swarf and dried on dirt.

A thin, friction-optimised sealing lip points inwards. It is used to minimise the discharge of lubricant.

Cross wipers are always designed to be a contact seal. That means that for reliable operation a normal force FN is required, which acts on the sealing lips. This gives rise to a friction force FR, which is reduced by optimising the geometry and the material of the sealing lip. It is essential that the sealing lip, always loaded with a minimum force FN, makes contact with the surface of the guide rail.

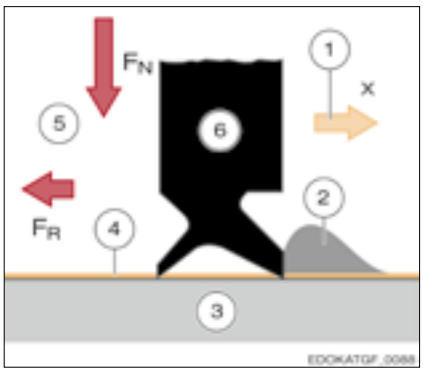

1 Direction of movement
2 Dirt
3 Guide rail
4 Lubricant
5 Carriage interior
6 Cross wiper

F_N Normal force
F_R Friction force

The function of a cross wiper (cross-section) in the direction of movement (yellow arrow).

Longitudinal wipers

Longitudinal wipers are seals, which are arranged in the direction of movement and seal the rolling element recirculating units through their entire length of the side. The seal is not actively made in the movement, as lubricant on the inside and foreign bodies on the outside only make lateral contact with the wiper. The effect is comparable with that of a rotary shaft seal. Ideally, as with the SCHNEEBERGER MONORAIL guide-ways, four longitudinal wipers are used on both sides on the upper and lower tracks. The longitudinal and cross wipers are built into the carriage:

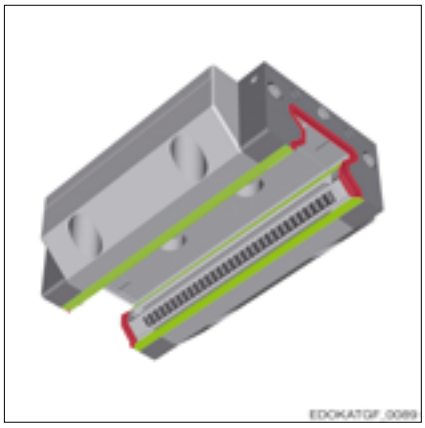

Longitudinal wipers (green) and cross wipers (red) on a carriage:

Smooth-running cross wipers

The smooth-running cross wiper is used to reduce the push force in applications with minimal accumulation of dirt. The sealing lip is not designed to be double-lipped and the preload of the sealing lip is reduced.

Additional cross wipers

Under particular operating conditions such as heavy accumulation of dirt, the impact of swarf or coolant, additional seal components can be used, which are installed on the front end of the carriage and offer additional mechanical protection.
These are single-lipped additional seals made of NBR or high-tenacity fluorinated rubber or non-contact sheet metal attachments, which are intended to keep larger particles away from the sealing lips of the wipers.

1.8.3 Friction of different seals

There is a direct relationship with contact seals between friction force FR and sealing efficiency. Good sealing efficiency requires a high degree of surface pressure on the sealing lip with a steady increase in pressure. This can only be achieved by means of a large preload path, which is connected with correspondingly high compressive force and friction in the wiping direction.

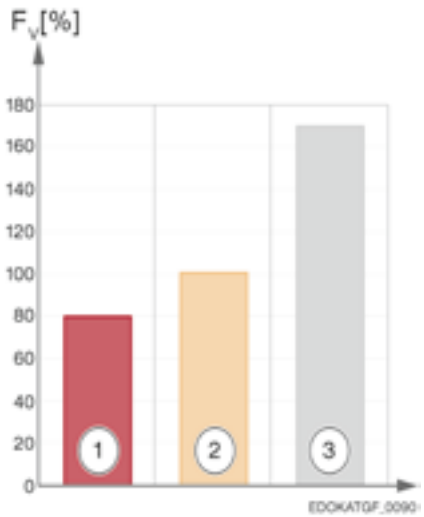

1 Smooth-running wiper (QL)
2 Standard wiper (QN)
3 Standard wiper and addition wiper (ZBN/ ZBV)

Push force based on the example of a ball guideway BM 35. The push force FV (%) of wiper variants is illustrated in relation to a standard wiper (100%).

1.9.1 Definition

Roller bearing-fitted guideways generate airborne noise and body noise. The airborne noise caused directly by the bearing is secondary in this. The main component is the generation of body noise, which essentially depends on the type of connection and the consistency of the surrounding structure.

1.9.2 Causes

Essential sources for the build-up of noise are elastic deformations in the points of contact between rolling elements and guideway, surface consistencies, effects of friction and noises caused by lubricants and the connection with and consistency of the surrounding structure.

Elastic deformations

Deformations occur at the points of contact between rolling elements and guiding components due to the impact-like loads that occur Particularly the entrance and exit of the rolling elements into the load-bearing zone of the carriage leads to periodic oscillations, which cause a running noise, the intensity and frequency of which increase with speed.

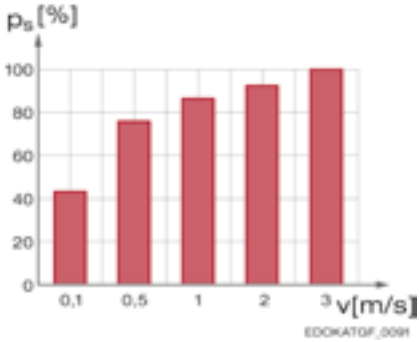

The build-up of noise by a ball guideway BM 25 depending on speed. Speed v (m/s) is plotted against sound pressure pS (%). Lubrication is provide by means of oil.

Surface effects

The geometry of the rolling contacts has an essential influence on running noise. Both different diameters of rolling elements and rippling or surface unevenness in surfaces can cause vibrations, in which surface quality has the biggest influence on this. Consequently, great value is placed by SCHNEEBERGER linear guideways on a high surfance quality standard particularly of the rolling elements.

Friction

The friction contact surfaces between the rolling elements themselves, between the rolling elements and the surrounding guiding components and between the sliding seals for carriage and guide rail also contribute to the build-up of noise.
Noise is generated at high speeds during the return passage of the rolling elements. Spacers prevent the rolling elements from rubbing against one another or from being able to impact upon one another. See Section 1.9.3 Spacers.

Lubricant

The film of lubricant in the carriage has an attenuating effect on the running noise as it is able to prevent direct mechanical contact of the sliding and rolling contacts.
Contaminants in the lubricant can, however, contribute to an intensification in the running noise, as the surfaces of the guiding components housed in the rolling contact are roughened as a result of being rolled over by, in particular, hard and large particles.
The base oil viscosity of the lubricant and, in the case of lubricating grease, the thickener type also influence the running noise.

1.9.3 Measures to reduce noise

Lubricant

The thicker the film of lubricant the smaller the metal contact is thus the noise. The use of special greases is therefore an excellent aid for reducing noise emissions. The behaviour is determined both by the base oil viscosity and by the thickener type and proportion of thickener. The higher the base oil viscosity and the higher the proportion of thickener (e.g. NLGI grade 2), the greater the reduction that can be expected. Mineral-oil-based greases with calcium and barium soap thickeners, for example, have proved themselves to be effective for lubrication of low-noise linear guideways. The following diagram shows the noise level of a SCHNEEBERGER MONORAIL guideway with different lubrication states based on the example of a ball guideway BM 35.

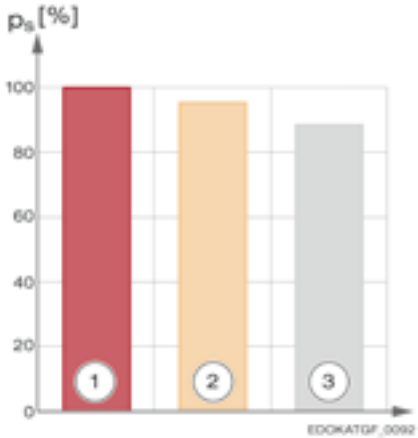

Lubrication state:
1 dry
2 oiled
3 greased

The build-up of noise by a ball guideway BM 35 depending on lubrication. The lubrication state is plotted against noise pressure p_s (%).

Surfaces

To reduce the running noises due to metal contact of rolling elements with the surrounding guiding components, in the case of linear guideways the redirection unit components and return channels of the rolling elements are generally manufactured out of smooth plastics, which as well as reducing noise also reduce the sliding resistance of the carriages.
For this reason SCHNEEBERGER not only manufactures roller carriages but also ball carriages with a return channel made of plastic, which contribute to noise reduction thanks to their special geometry. For this purpose these channels form an additional lubrication reservoir.

Spacers

As well as the effective measures using lubricants to reduce noise, SCHNEEBERGER provides the option for BM ball guideways to incorporate spacers between the rolling elements.
These prevent the rolling elements from rubbing against one another or from being able to impact upon one another.
Spacers unlike chains have the advantage that they are only subjected to pressure and due to the absence of connecting bars no flexural or tensile stresses can occur, which has a positive impact on service life and wear.

1.10.1 Function of the lubrication

Adequate lubrication and subsequent lubrication using a lubricant adapted to the operating and environmental conditions is required to maintain the functionality of SCHNEEBERGER MONORAIL guideways.
The lubrication performs the following functions:

- Separate the metal rolling contacts thanks to the formation of a film of stable lubricant
- Minimise wear
- Reduce friction between rolling elements and track and between the rolling elements with one another.
- Reduce sliding friction of the seals
- Protect against corrosion
- Reduce running noises

In addition, lubrication can fulfil other functions too, such as:

- Dissipate heat or rinse dirt (in the case of oil lubrication)
- Together with the sealing system, prevent penetration of liquid or solid foreign bodies (with grease lubrication).

The lubrication therefore has an essential influence on the function and service life of the linear guideway.
The prerequisite for optimal efficiency of the lubrication system is, however, selecting a lubricant, which is suitable for the operating and environmental conditions as well as a properly functioning sealing system. The job of the seals in this is to keep the lubricant in the carriage and to prevent the penetration of liquid or solid foreign particles into the carriages. The seals should thus prevent the lubricant from getting contaminated or discharged.

Caution

Personal injury and damage to components due to breakage

- ➡ A deficiency of lubricant or choosing an unsuitable lubricant are the most common causes of failure of linear guideways alongside contamination and overload.
- ➡ Make sure you employ the correct operating conditions and lubricate regularly.

1.10.2 Types of lubricant

Both grease and fluid grease or oil can be used as a lubricant for SCHNEEBERGER MONORAIL guideways.
Lubricants with solid lubricant additives such as, for example, graphite, MoS_2 or PTFE are not suitable for use in SCHNEEBERGER MONORAIL guideways as they can form harmful deposits on the rolling element tracks.
The lubricant can either be applied manually, e.g. using a grease gun, or automatically using a centralised lubricating system or an additional lubricant dispenser on the carriage, see Section 4.15.9 - Lubrication plate SPL. The use of a centralised lubricating system generally guarantees a consistent and reliable supply of lubricant. In special cases an oil airborne lubricant is also used, which is a type of minimum-volume lubrication. See Section 4.15.8 - Application expertise on lubrication requirements in respect of lubrication under certain operating conditions.
Critical for the selection of lubrication type and its implementation are:

- Type of application
- Operating conditions
- Configuration of the machine and of the surrounding structure
- Accessibility of the guideways

1.10.3 Characteristics of the lubricants

Lubricating oils

Either mineral oils or synthetically manufactured synthetic oils with additives to protect against ageing, corrosion, foaming and to increase compressive strength are used as lubricating oils. Lubricating oils are classified into different grades according to their viscosity in accordance with DIN 51519.

Lubricating oils

- penetrate more easily into the carriages and disperse more effectively than grease
- effectively dissipate heat
- escape more easily from the carriage than grease
- are subject to the force of gravity and thus require a higher design overhead depending on the installation orientation than is the case with grease lubrication
- Provide a rinsing effect.

Lubricating greases

Lubricating greases consist of a base oil (usually mineral oil), a thickener (metal soaps, simple soaps, complex soaps (calcium, lithium, sodium, other)) and various additives (e.g. to protect against oxidation, corrosion and to increase compressive strength). Lubricating greases are classified according to their consistency and/or strength into various NLGI grades (National Lubricating Grease Institute) in accordance with DIN 51818. See Section - Characteristics of lubricants in accordance with DIN.

Lubricating greases

- prevent running noises
- support the effect of the wipers thanks to their solid consistency
- counteract the penetration of dirt into the carriage
- remain defined at the lubricating point
- thanks to their share of thickener have a sustained release / deposit effect
- have a permanent effect and support extended subsequent lubricating intervals
- the thickener in the lubricating greases also offer certain emergency running characteristics

Fluid greases

Fluid greases are low-viscosity greases and thus

- are suitable for use in centralised lubricating systems
- have a soft, fluid-like consistency

Miscibility

Mineral-oil-based lubricating oils can be mixed when they have the same classification and their viscosity does not differ by more than one ISO-VG grade.
Ask the lubricant manufacturer for synthetic oils.

Changing lubricant

Subsequently changing oil lubrication to grease lubrication can be completed without danger assuming compatibility of the different lubricants.
Changing grease lubrication to oil lubrication is not possible, as grease will remain in the narrow lubrication channels following initial lubrication and this obstructs the flow of oil which means that an adequate supply of oil lubricant cannot be guaranteed.

1.10.4 Recommended lubricants

Lubricants recommended by SCHNEEBERGER:

Lubrication with oil

- Mineral oil CLP in accordance with DIN 51517 or HLP in accordance with DIN 51524 in the viscosity range ISO VG 32 to ISO VG 100 in accordance with DIN 51519
- Bed track oils CGLP in accordance with DIN 51517 up to viscosity grade ISO VG 220

Lubrication with grease

- Lubricating grease KP2K in accordance with DIN 51825

Lubrication with fluid grease

- Fluid greases GP00N or GP000N in accordance with DIN 51826

1.10.5 Indicators and additives for lubricants

Viscosity

Viscosity is understood to mean the measurement for resistance to flow based on the internal friction of a liquid.
Lubricating oils are classified into different grades according to their viscosity in accordance with DIN 51519. A low viscosity means thin-flowing, high viscosity means that the lubricant is viscous. Water, for example, has the ISO-VG grade 1.

ISO viscosity grades in accordance with DIN 51519

Viscosity grade ISO	Mid-point viscosity at 40°C (mm^2/s)	min. limits of the kinematic viscosity at 40 °C (mm^2/s)	max. limits of the kinematic viscosity at 40 °C (mm^2/s)
ISO VG 32	32	28.8	35.2
ISO VG 46	46	41.4	50.6
ISO VG 68	68	61.2	74.8
ISO VG 100	100	90	110
ISO VG 150	150	135	165
ISO VG 220	220	198	242

Consistency

The resistance of a grease to deformation is defined as its consistency. This indicator is used to classify lubricating greases. For this purpose in DIN 51818 the lubricating greases are classified into 9 different NLGI grades. Worked penetration is used as an evaluation parameter for the classification, which states how deeply a standard cone penetrates into the lubricant under weight.
For SCHNEEBERGER MONORAIL guideways, greases in NLGI grades 000 to 3 are used.

NLGI grades in accordance with DIN 51818:

NLGI grade	Type of grease	Consistency	Worked penetration (0.1 mm)	Application
000	Fluid greases	fluid	445 - 475	Use in centralised lubricating system, gear lubrication, SCHNEEBERGER MONORAIL guideways
00		viscous	400 - 430	
0		semi-fluid	355 - 385	
1	soft greases	very soft	310 - 340	
2		soft	265 - 295	SCHNEEBERGER MONORAIL guideways
3		smooth	220 - 250	
4		almost solid	175 - 205	Sealing greases
5	hard greases	solid	130 - 160	
6		very solid	85 - 115	

Additives

Lubricants used industrially are generally mixed with various additives. These are admixtures, which provide the lubricant with certain characteristics or improve it.

Additives	Intended purpose
Antioxidants	Prevention of changes in lubricant
VI-improver	Reduction in the dependency of viscosity on temperature
EP additives	Improvement in compressive rigidity (is needed for high forces; EP = extreme pressure)
Corrosion inhibitors	Corrosion and rust prevention
Foam inhibitors	Prevent the formation of foam (improves force transmissibility)

1.10.6 Brief description of the lubricants in accordance with DIN 51502

Structure of the brief description for lubricating oils

Sample brief description of lubricating oils:	C	L	P	PG	-68
Lubricating oil type					
Identification letter for additives (corrosion, ageing)					
Identification letter for additives (wear, friction, loading capacity)					
Additional identification letter for synthetic lubricants					
Viscosity, ISO-VG grade					

Lubricating oils C, CL, CLP in accordance with DIN 51517

Lubricating oil CLP	Mineral oil (C) with additives to increase corrosion protection and resistance to ageing (L) and to reduce wear in the mixed friction area (P)
Lubricating oil CGLP	Sliding and bed track oil (CG) with particularly good sliding behaviour and adhesion (G) and with additives to increase corrosion protection and resistance to ageing (L) and to reduce wear in the mixed friction area (P)

Hydraulic oils HL, HLP, HVLP in accordance with DIN 51524

Hydraulic oils HLP	Hydraulic oil (H) with additives to increase corrosion protection and resistance to ageing (L) and to reduce wear in the mixed friction area (P)

Structure of the brief description for lubricating greases

Sample brief description of lubricating greases:	K	P	2	K	-30
Type of lubricating grease					
Additional letter for base oil type and additives					
Consistency, NLGI grade					
Performance indicator for maximum operating temperature and behaviour in relation to water					
Minimum operating temperature in °C					

Lubricating greases K in accordance with DIN 51825

Lubricating grease KP 2 K	Lubricating grease for roller-contact bearings, slide bearings and sliding surfaces (K) with additives to reduce friction and wear in the mixed friction area and/or to increase loading capacity (P), consistency grade NLGI 2, maximum operating temperature 120°C (K)

Lubricating greases OG in accordance with DIN 51825

Lubricating grease OGP 2 K	Lubricating grease for open gears (OG) with additives to reduce friction and wear in the mixed friction area and/or to increase loading capacity (P), consistency grade NLGI 2, maximum operating temperature 120°C (K)

Lubricating greases G in accordance with DIN 51826

Lubricating grease GP 00/000 N	Lubricating grease for closed gears (G) with additives to reduce friction and wear in the mixed friction area and/or to increase loading capacity (P), consistency grade NLGI 00/000 (fluid grease), maximum operating temperature 140°C (N)

1.10.7 Deciding factors in your choice of lubricant

The choice of a suitable lubricant should be made in collaboration with a lubricant manufacturer. The following factors are critical in your choice of lubricant, quantities of lubricant and application method:

- Type of use, e.g. tool machinery, handling, cleanroom
- Operating conditions, e.g. speed, stroke, forces, vibrations
- Environmental influences, e.g. temperature, cooling lubricant, dirt
- Linear guideway, e.g. ball/roller, size, installation orientation, accessibility
- Lubricant feed, e.g. manual, centralised lubricating system, lubrication intervals, compatibility with other lubricants
- Miscellaneous, e.g. operating life of the lubricant, approvals/specifications, materials, environmental factors, cost-effectiveness

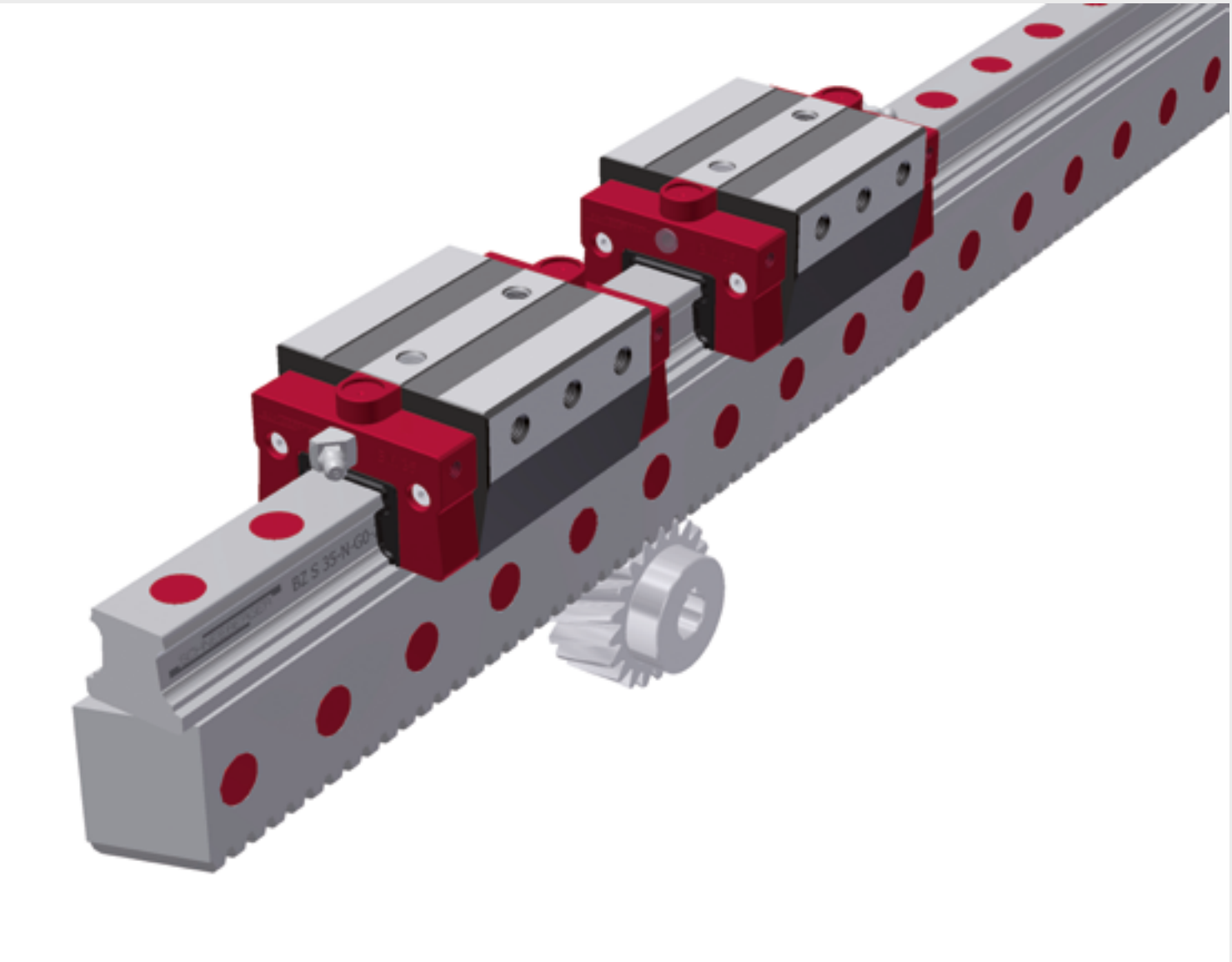

SCHNEEBERGER
LINEAR TECHNOLOGY

2	Technical Data: Driving	47
2.1	**Integral rack drive BZ**	**50**
2.1.1	Construction	50
2.1.2	Integration	51
2.1.3	Comparison with other drive designs	51
2.1.4	Tooth quality	52
2.2	**Lubrication**	**53**
2.2.1	Function of the lubrication	53
2.2.2	Types of lubricant	53
2.2.3	Characteristics of lubricants	53
2.2.4	Recommended lubricants	53

2.1.1 Construction

Linear guideways with BZ 25 and BZ 35 integral rack drive consist of one BM profile rail with integral rack on which one or multiple rolling element carriages run, and one or multiple drive pinions, which mesh with the rack. All BM types can be used in the corresponding sizes as carriages. Typical applications of such systems are used in the fields of handling, automation, water jet / laser cutting systems, wood processing. To construct a complete axis, generally a standard BM SCHNEEBERGER MONORAIL guideway is used as a parallel rail. The pinion is usually driven by means of gear motors, see figure, which is not within SCHNEEBERGER's scope of supply.

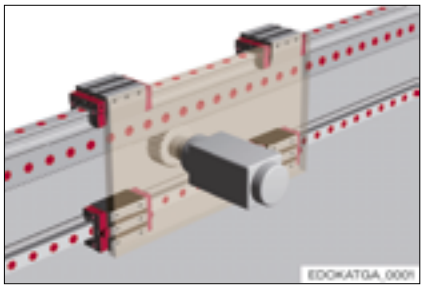

Parallel rail with pinion

The gear rack is fixed on to the underside of the guide rail ensuring that no orientation of the gear rack with the guideway is necessary.

In addition, in the case of the SCHNEEBERGER MONORAIL guideways with integral MONORAIL BZ-type rack drive, an AMS 4B distance measuring system can also be integrated.

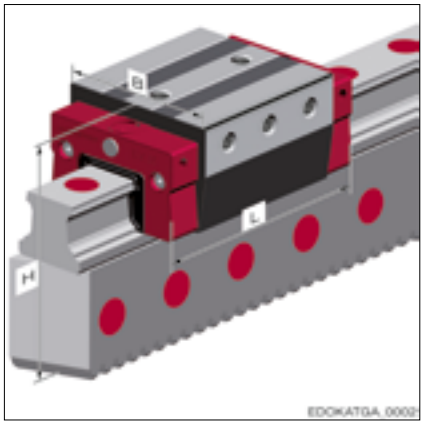

Carriage with guide rail and rack

The BZ rails can be butt-joined.

2.1.2 Integration

Integrating the rack drive into SCHNEEBERGER MONORAIL guideways offers significant advantages compared to having a separately installed rack

- Reduced expense in terms of design and manufacturing, as only two rather than three locating surfaces are required for guiding and driving

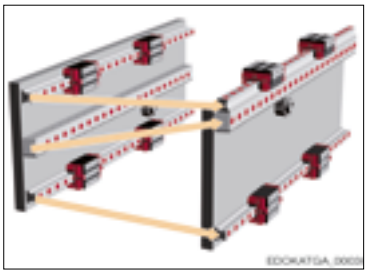

- Minimal space requirement thanks to its fairly compact design
- Installation and orientation of the rack segments in the machine is not required
- Orientation of the rack for the guide rail is not required
- Reduced logistics overhead
  - No purchase and storage of racks
  - One supplier for guiding and driving

2.1.3 Comparison with other drive designs

Advantages of the BZ SCHNEEBERGER rack drive compared with:

Ballscrew

- Multiple independent movements on a single guide system possible
- Essentially more rigid in the case of large lengths and large forces (backlash)
- Positioning not temperature-dependent
- Interchangeable in some instances
- Significantly more robust
- Design does not limit speed capability (similar inclination of the spindle)
- Preload fully adjustable and can be varied during operation
- No tendency to vibrate in the case of long lengths
- No separate storage required
- Infinitely long travel distances can be achieved

Toothed belt drive

- Significantly higher forces can be transmitted
- More precise positioning and greater rigidity in case of alternating forces
- Reduced wear
- Temperature-resistant
- No breaking off of the teeth

Linear motor

- Significantly reduced investment
- Significantly lighter
- No cooling required
- Significantly higher transmittable forces
- Does not attract metal debris (e.g. swarf)
- A smaller guideway can be selected, as the magnetic attraction forces do not need to be additionally taken into account
- No brake carriage required in case of power failure
- Significantly reduced energy costs
- "Elastic" in response to alternating force

2.1.4 Tooth quality

The tooth quality of spur gears is defined in DIN 3961/3962/3963/3967 and tested in accordance with DIN 3999. The tolerance class, e.g. quality grade 5 (Q5), determines the dimensional accuracy of the gear rack (pitch error, shape and position tolerances of the reference circle, deviation of the profile from the nominal profile, ...) and thus for rack drives e.g. the achievable positional accuracy and running quality. Quality grade 5 (depending on the manufacturer) is the highest grade, which can still be manufactured using cost-effective grinding engineering.
As the specified standards only apply in respect of gearwheels, all information for racks is interpreted as though the rack were a pinion where z = 100 teeth.
SCHNEEBERGER offers two qualities of gear for the MONORAIL BZ systems in order to be able to fulfil different customer requirements in relation to quality and cost-effectiveness:

- Quality Q5 (on request), with hardened and ground gearing
- Quality Q6, with soft and milled gearing

The teeth of the pinions that can be supplied as accessories (see SCHNEEBERGER product catalogue for MONORAIL and AMS) incorporate quality Q6 and are essentially hardened and ground, as the gearing of the pinion undergoes significantly more mesh engagements per travel distance than the rack.

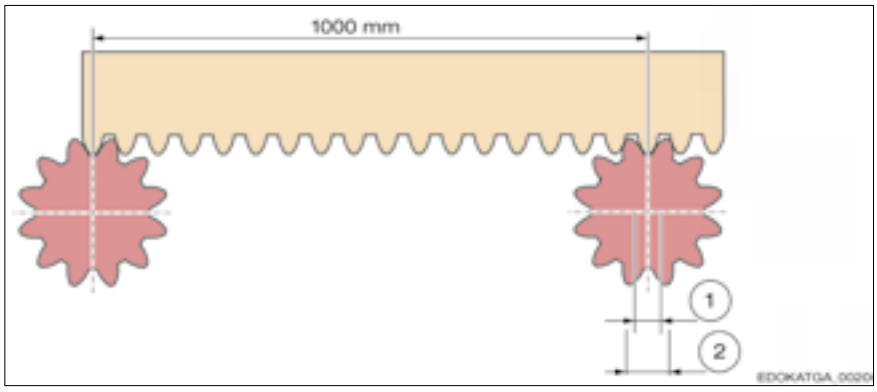

Example for 1000 mm travel distance for tolerance Q5 and Q6.
Accumulative pitch error for Q5 ≤ 40 µm (on request)
Accumulative pitch error for Q6 ≤ 50 µm

2.2.1 Function of the lubrication

Adequate lubrication using a lubricant adapted to the operating conditions is required to maintain the functionality of the rack drive. This also includes regular subsequent lubrication.
Lubrication performs the following functions:

- Separate metal rolling contacts due to the formation of a film of stable lubricant
- Minimise wear
- Reduce friction between the rolling contact surfaces on the gearwheel and rack
- Protect against corrosion
- Reduce running noises

The lubrication therefore has an essential influence on the function and service life of the gear rack.

2.2.2 Types of lubricant

Both grease or liquid grease or oil can be used as a lubricant for the rack drive. Mineral-oil-based lubricants or synthetic lubricants can be used, which also in part contain a proportion of solid lubricants such as graphite or MoS2.

2.2.3 Characteristics of lubricants

It is important to ensure in the case of lubricants for open gears and gear racks that they provide high viscosity and adhesion so that they cannot be spun off by the rotating gearwheels.
Other characteristics that the lubricant must fulfil include:

- High shear stability
- Good wear protection
- Good corrosion protection
- Oxidation stability
- High compressive stability

2.2.4 Recommended lubricants

Lubricants recommended by SCHNEEBERGER:

Lubrication with oil
Mineral oil CLP in accordance with DIN 51517 in viscosity grade ISO VG 460 in accordance with DIN 51519

Lubrication with grease
Lubricating grease OGP2K in accordance with DIN 51825
For characteristics of lubricants, see Section 1.12 - Lubrication.

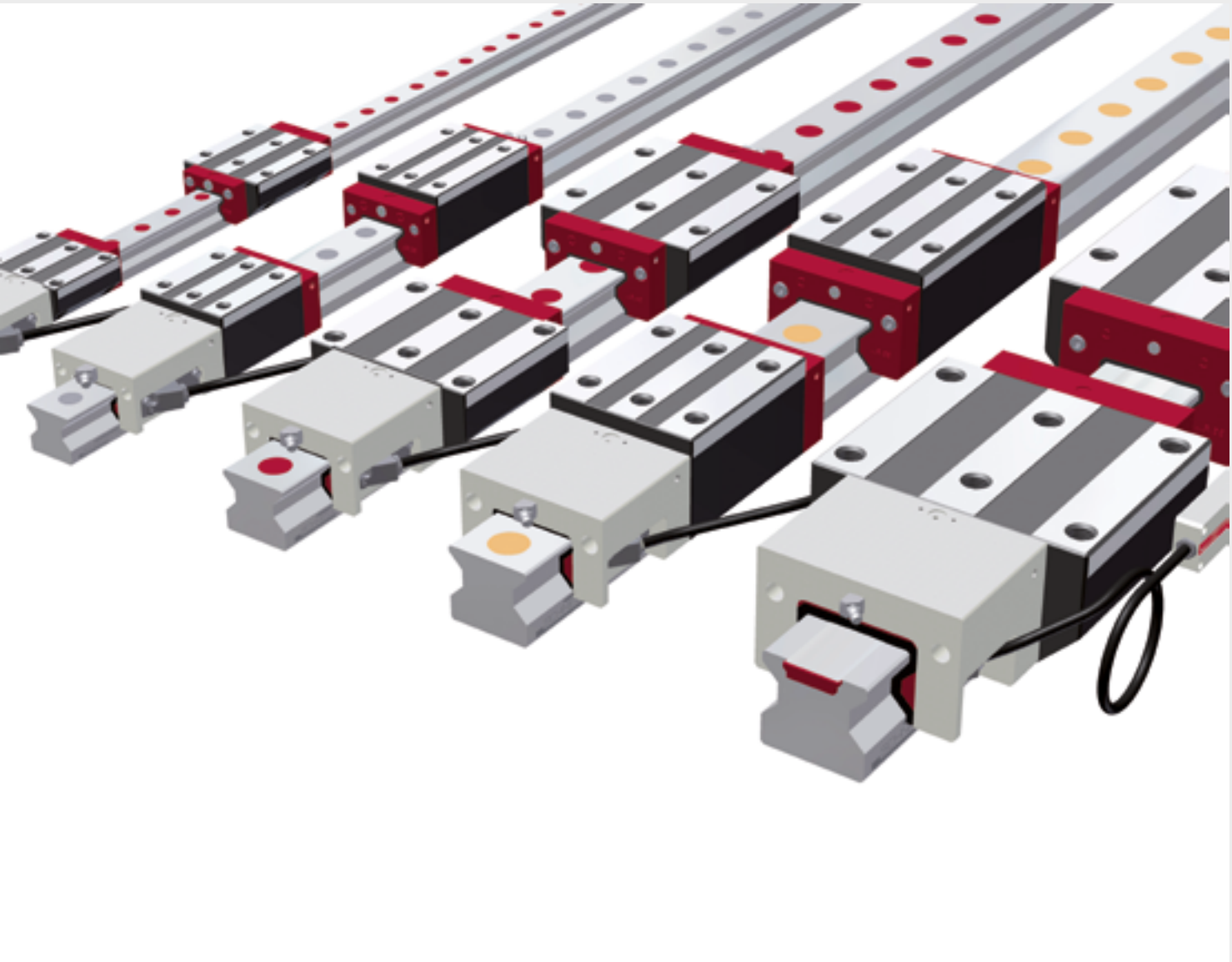

SCHNEEBERGER
LINEAR TECHNOLOGY

3	**Technical Data: Measuring**	**55**
3.1	**Distance measuring systems**	**58**
3.1.1	Classification of measuring systems	58
3.1.2	Overview of different distance measuring principles	60
3.1.3	Magneto-resistive measuring technology by SCHNEEBERGER	60
3.1.4	Distance measuring system	64
3.2	**Interfaces**	**73**
3.2.1	Incremental interfaces	73
3.2.2	Absolute interfaces	76

3.1.1 Classification of measuring systems

Different types of measuring principle

Different types of high-precision distance measuring systems are used for linear distance measuring in industrial applications. These can be categorised into different groups depending on the physical measuring principle. The basic principle of a periodic graduation, which is scanned with a sensor, is widely used.

- Magneto-resistive systems record periodic changes in magnetization of the scale using MR sensors (MR = magneto-resistive) or Hall-effect sensors. Unlike optical systems, magnetic systems are not sensitive to dirt, and typical graduation periods are between 0.4 and 10 mm.
- Optical systems are widespread. Using them a graduation is scanned with appropriate sensors, which record a periodic change in brightness or in the phase of the reflected or transmitted light. By means of etching or vapour deposition, very fine graduations with periods less than 10 µm can be achieved, which is why optical systems generally deliver the highest resolutions.
- Inductive systems work with a mechanically structured, metal scale, which can be designed to be extremely robust. The bands on this scale work in a similar way to the yoke of a transformer. As a result of the shift, the amplitude and phase of an electric oscillation is modulated. Graduation periods below 1mm are difficult to achieve with these systems.
- Magnetostriction and other processes have only found limited appeal.

Depending on the type of arrangement of components

What however has proved to be far more important is how the drive components and measuring system components work together. Depending on the active principle, we talk about an indirect or direct measurement with machine axes.

In the case of the indirect distance measurement the linear shift is converted into a different measured value. One example that we often encounter is a linear axis with ballscrew drive. The ballscrew converts rotation into linear motion, and the angle of rotation is usually measured directly by the servo motor.

The advantage of this is being able to determined the position of the axis with an inexpensive and compact rotary encoder. The disadvantage is that the conversion of one measured value into another can never be completed without error. In the case of the spindle, pitch errors, clearance, vibrations and thermal expansion distort the measurement of position. In the case of direct measurement a so-called linear measuring scale is used, which is scanned directly by a sensor. Better results are attained as a result of the targeted elimination of intermediate values and minimal distance between the measurement object and the measuring sensor.

In general, the direct distance measurement should therefore be favoured as it delivers more accurate readings and ones less influenced by environmental factors, provided it can be achieved with a justifiable amount of effort in achieving the technical measurement. For this reason SCHNEEBERGER positioning systems integrates AMS into its linear guideway to combine the advantages of a precise linear guideway with the benefits of direct distance measurement.

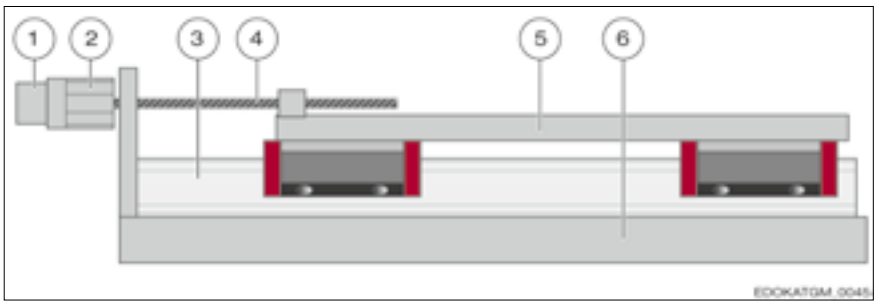

Linear guideway without integral positioning measurement system MONORAIL AMS:

1	Rotary encoder	4	Drive ballscrew
2	Motor	5	Table
3	Linear guideway	6	Machine bed

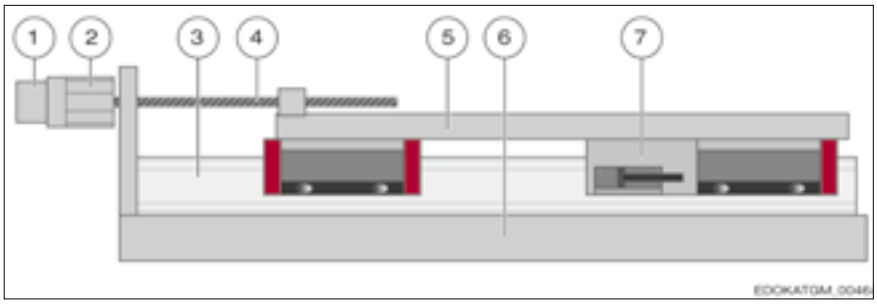

Linear guideway with integral positioning measurement system MONORAIL AMS:

1	Rotary encoder	5	Table
2	Motor	6	Machine bed
3	Linear guideway	7	Integral positioning measurement system MONORAIL AMS
4	Drive ballscrew		

Depending on the type of electronic interface used

Analogue current interfaces (11 μA_{SS}) or analogue voltage interfaces (1 V_{SS}) are used The problem of identifying direction is resolved by transmitting two sinusoidal signals with a phase offset of 90° (et seq. sine, cosine). For high-resolution processing (interpolation) for this purpose two high-grade A/D converter channels are needed on the receiver side. By digitizing the two channels, the "pole angle" of the signal is immediately defined by determining the quadrant and with trigonometry, thereby deducing the exact position. Whole periods can easily be counted using an up-down counter.
There are products incorporating an individual reference mark, a regular reference point grid or an irregular reference point grid (distance coding). It is possible with increasing levels of integration to integrate the interpolation of the signals on the side of the evaluation electronics in the sensor. These systems deliver purely digital information (quadrature signals) at high resolution. The interpolation of the system defining accuracy is thus on the side of the distance measuring system.
One disadvantage is that the ratio of travelling speed and resolution is determined by the potential data transmission rate. Both the analogue systems and the digital ones with integral interpolation electronics can be included amongst the incremental signal transmissions, as the information is transmitted as distinct from preceding versions. In the case of absolute interfaces, which either attain the absolute position as a serial protocol (SSI) or combined with an analogue incremental data transmission. The essential difference with absolute systems is that the absolute position is immediately available after switching on.

3.1.2 Overview of different distance measuring principles

Distance measuring principle	Optical	Magneto-resistive	Inductive					
Resolution	•••	•••	•					
Ease of integration	•	•••	•••					
Sensitivity to dirt	•	••	•••					
Installation space	•	•••	•••					
Installation	••	•••	•••					

Note: • = Satisfactory, ••• = Very good

3.1.3 Magneto-resistive measuring technology by SCHNEEBERGER

Magneto-resistive effect

All magneto-resistive effects are based on the fact that ferromagnetic thin layers change their ohmic resistance due to external magnetic fields.
The three known effects are:

- AMR (Anisotropic Magnetic Resistance)
- GMR (Giant Magneto Resistance)
- TMR (Tunnelling Magneto Resistance)

The sensors in SCHNEEBERGER's distance measuring system use the anisotropic magneto-resistive effect (AMR effect), which was discovered in ferromagnetic materials by Thomson in 1857. If the direction of electrical flow is parallel to the magnetisation in such a conductor, the specific resistance becomes a few percent greater, compared with normal magnetisation and direction of current flow normally in relation to one another.
With a thin layer of a ferromagnetic material, it is possible to build magnetic field sensors by orienting its internal magnetic field with an external magnetic field. After the external magnetic field is removed, the internal magnetic field continues to be oriented. This is an essential characteristic of ferromagnetic materials

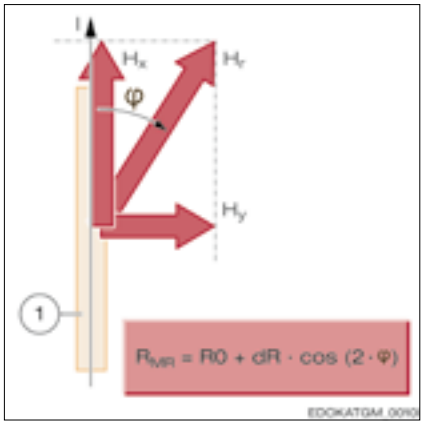

1 MR-strips
I Current
H_x Intrinsic magnetization of the strip (mainly due to form anisotropy)
H_r Resulting magnetization
H_y Measuring field
R_{MR} Resistance of MR strips
R0 medium resistance (field-free)
dR maximum change in resistance
φ Angle between magnetization and direction of current flow

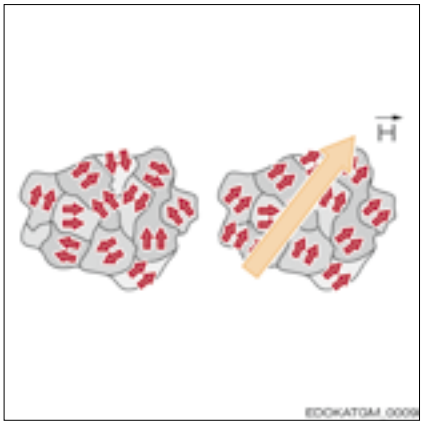

Magnetic regions (Weiss domains) are oriented on the external magnetic field.

The magneto-resistive incremental sensor

As the resistance of an individual MR strip is influenced by temperature variations and magnetic interference fields, four strips are usually used as the sensor, which are switched like a Wheatsone bridge. They are characterised by the fact that the same change in all four resistances, e.g. due to an increase in temperature, generates no voltage difference on the outputs. To achieve a measurable effect, the resistances must therefore be deflected appropriately, e.g. resistance 1 increased, 2 decreased, 3 increased, 4 decreased. This can be achieved by appropriate positioning of the MR strips in the periodic magnetization. It follows on from this that each sensor is adapted to its graduation period for the magnetization and only works with this. In addition, an MR strip is designed not as an individual but as a series switching of multiple strips, which in each case are one magnetic period away from one another. We talk about equivalent positions. This is how to attain the mean variations in the scale in relation to the intensity of magnetization and pole length.
Based on the quadratic characteristic curve for the sensors (the value of the field intensity is measured), an initial signal is attained with half the period length of the magnetic graduation. MONORAIL AMS sensors have a magnetic graduation of 400 µm and thus an electric signal period of 200 µm.
Finally two of these identical structures are offset by 1/4 signal period (50 µm) thereby obtaining a sine and a cosine signal, with which the direction of movement and distance of travel can be measured.
The full schematic sensor structure then has the following appearance:

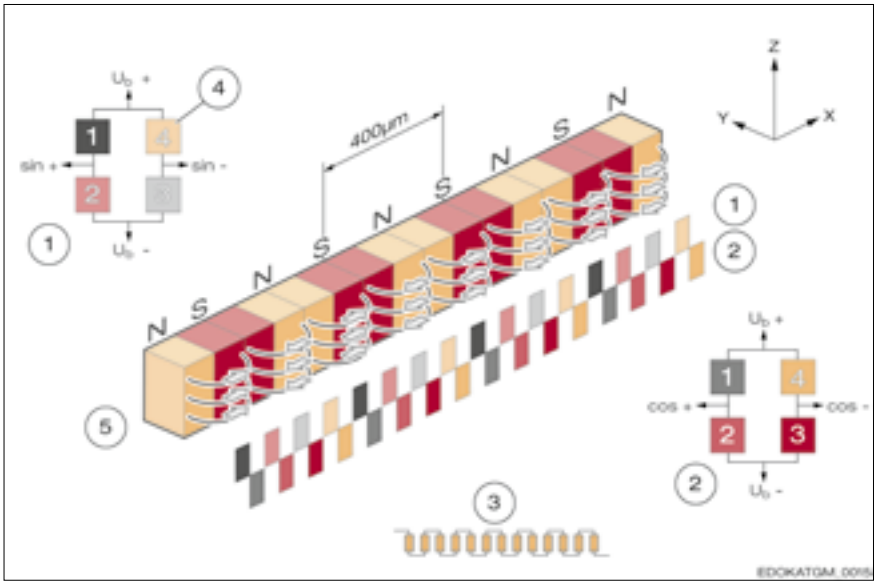

Schematic sensor structure:

1	Sine sensor	1	MR-strips
2	Cosine sensor	2	Magnetization
3	Averaging over 13 periods	Ub	Bridge voltage

As the origin for the two signals comes from the same positions on the measuring scale, such sensors are very insensitive to lateral and rotary displacements. In practice, this results in stable characteristics for the periodic measuring variations.
The field intensity of the scale changes with the spacing from the scale in the y direction. This results in the magnetic fields offsetting one another at a great distance from the scale. At close range, the distance is about a period length, but the magnetic field intensity decreases exponentially with distance in the y direction.

Magnetic scale

If you generate a magnetic scale whose field varies periodically in the longitudinal direction (N-S-N-S-N-S...), with MR sensors you can build an incremental distance measuring system.

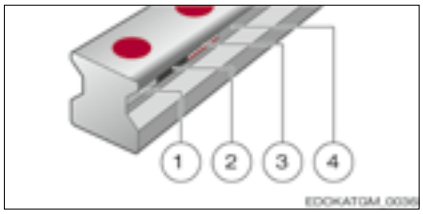

1 Ground slot
2 Adhesive magnetic strip
3 Magnetization
4 Welded on protective strip

Magnetic scale

SCHNEEBERGER manufactures profile rails in which the measuring scale is integrated. Precise geometric positioning of the magnetic track is achieved by means of mechanical processing of the edges. To protect the measuring scale against scratches, dirt, coolant and lubricant, it is covered with a very hard, thin strip. The edges of this strip are welded with the profile guide rail and are thus sealed.

Interaction of the measuring system

Included in a fully functional system are a guide rail with integral measuring scale (1) and a measuring carriage (3), which is obtained as a complete unit. The measuring carriage consists of a MONORAIL carriage on to one side of which the housing is installed.

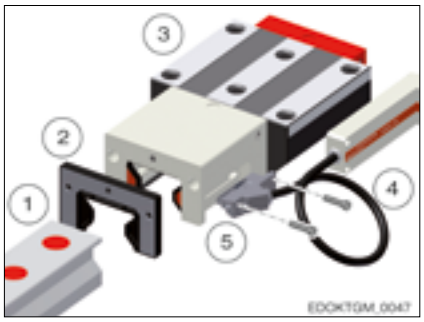

1 Guide rail with integral measuring scale
2 Accessories
3 Measuring carriage
4 Screws
5 Reading head

Magnetic scale

The housing contains a cutout with supporting surfaces for the reading head (5). The reading head is fastened to the housing with screws (4) and is therefore easy to replace. Cross wipers are installed at the two ends of the housing, which together with the assembled longitudinal wipers form an enclosed chamber around the profile of the guide rail. The external end of the housing contains mounts and threaded fixing holes for accessories (2). The carriage can continue to be lubricated, including from the side of the housing, by means of the standard lubrication connections.

Contact sampling

For error-free processing of incremental signals, a consistent working distance between the sensor and the measuring scale is required. This small tolerance cannot be observed with a rigid, adjusted structure for measuring scale and sensor, which is why a contact sliding measuring principle has been selected for the AMS distance measuring systems. For this the MR sensors are packed in a shoe housing, which is held in its horizontal position by means of a leaf spring and is pressed against the measuring scale by the compression springs. The shoe housing has precisely ground sliding surfaces over which the working spacing between sensor and measuring scale is set and kept constant. The leaf spring is configured to be exactly parallel to the direction of movement so that it is rigid in the direction of measurement x and supple in the z direction.

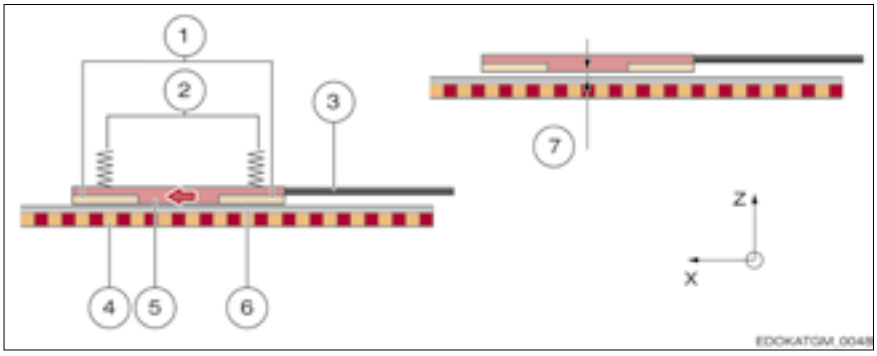

AMS distance measuring systems:

1 Ceramic shoes
2 Compression spring
3 Leaf spring
4 Measuring scale
5 Shoe with sensor
6 Protective strip
7 Working spacing

The sliders also form a wiper edge, which larger particles and liquids cannot pass. Furthermore, the wipers described above for the housing must be intact to ensure effective operating conditions for contact sampling.
This construction ensures that all parts subject to wear and the specified electronics are in the reading head. This can very easily be replaced thanks to the lateral mount. The small manufacturing tolerances ensure that reading heads can be replaced in the field without difficulty. The guide rail with the scale remains untouched.

3.1.4 Distance measuring system

Interpolation

For applications in distance measuring, interpolation means the signal conversion of analogue input signals into digital output signals with a smaller signal period. This is necessary as counter readings and/or position readings cannot be generated directly from analogue signals.

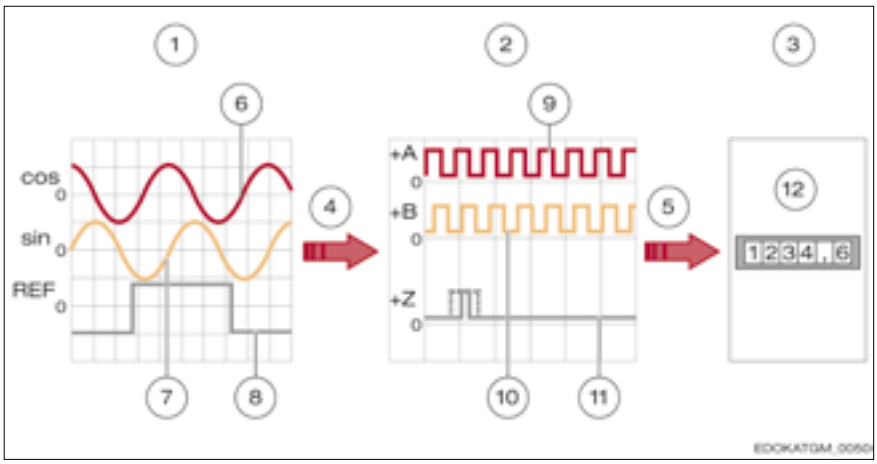

The analogue input signals (sin, cos, Ref) are interpolated (red arrow) with the digital output signals (+A, +B, +Z). Inverted signals are not represented:

1	Analogue input signal: sin, cos, REF	7	Analogue input signal (sin)
2	Digital output signal: +A, +B, +Z	8	Analogue input signal (REF)
3	Downstream electronics	9	Digital output signal (+A)
4	Interpolation	10	Digital output signal (+B)
5	Signal transmission	11	Digital output signal (+Z)
6	Analogue input signal (cos)	12	Measuring counter, PC, controller for machine etc.

For this the interpolation factor defines the ratio of signal periods from the analogue input signal to the digital output signal.

Signal transmission and evaluation

The digital signals, consisting of the two incremental signals +A and +B and the reference signal +R, are transmitted to the downstream electronics. This can be a simple measuring counter, a PC or the controller for a machine. The downstream electronics then determines the position value from the digital signals by counting the signal edges. The counting direction is determined from the level of the other channel in question. Depending on how many edges are being evaluated, we talk about:

- Single edge evaluation:
  In each case only one edge of a channel is counted, which means one measuring step corresponds to one digital signal period
- Two-edge evaluation:
  Both rising and falling edges of a channel are counted, which means one measuring step corresponds to half a digital signal period
- Four-edge evaluation:
  Both rising and falling edges of both channels are counted, which means one measuring step corresponds to a quarter of a digital signal period

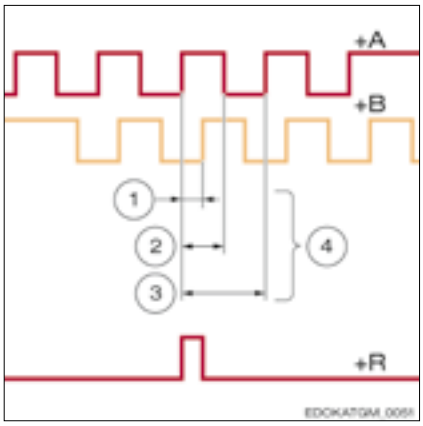

1 Four-edge evaluation
2 Two-edge evaluation
3 Single edge evaluation
4 In each case one measuring step

Edge evaluation

Amplitude control (AGC - automatic gain control)

Amplitude control is understood to mean the feature of SCHNEEBERGER AMS evaluation electronics to adjust the output amplitude to a particular value. In the case of AMS the instantaneous values of the sine and cosine signal are digitized for this purpose and the amplitude is calculated from this. The calculated value is compared with the nominal value and the bridge voltage Ub of the MR sensor is adjusted accordingly. As a result a stable output value for voltage is attained. After making the adjustment, a new better instantaneous value occurs.
MONORAIL AMS works with control times of between 2 kHz and 10 kHz.

Power Sense Function

All AMS products have a Power Sense wire (see pin layout supply voltage feed back) for offsetting the supply voltage drop-feed back) for offsetting the supply voltage drop in case of long power supply lines. If the controller being used supports this function, we recommend using it to guarantee functional reliability of the reading head.

Accuracy class
The accuracy class specifies the maximum expected measuring deviation of a system under the specified operating conditions. A distance measuring system with an accuracy class of 5 µm allows deviations of +/- 5 µm. For reasons of comparability, the accuracy class is specified assuming a reference length of 1 m.

Resolution
The resolution describes the smallest possible measurable positional change in the measuring system. It is determined by the analogue signal period, the interpolation factor and the evaluation procedure (integration time or sampling rate). By way of example, given a set interpolation factor of 100 and an input signal period of 200 µm you get an output signal period of 2 µm and according to four-edge evaluation in the controller a resolution of 0.5 µm.

Sampling rate
The sampling rate describes the frequency at which the analogue signal is sampled per time interval. Usually the time interval is one second, which is why the unit for the sampling rate is Hz. The frequency of sampling should according to the Nyquist-Shannon Theorem be at least twice as big in this as that of the original signal in order to guarantee what should approximate to a complete reproduction of the original signal.

Reversal error/hysteresis
If one were to conduct repeatability measurements using an appropriate test set-up in each case alternating in the opposite direction, then findings could be made about the difference in the average positions of the distance measuring system between an approach from the right and from the left. This difference is referred to as the reversal error or also hysteresis. SCHNEEBERGER specifies this value in its technical data sheets. The unidirectional repeatability is generally significantly below the specified hysteresis.

Repeatability
Unidirectional repeatability of a measuring system is generally understood to mean the ability to repeat the results that a particular system returns under exactly the same environmental conditions. With this type of assessment, the measuring error must be known and be factored into the analysis. The repeatability of a machine tool can be determined using simple methods for a particular position and a particular direction of travel. When assessing the repeatability, many measurements are completed, and the arithmetic mean and the standard deviation are calculated.

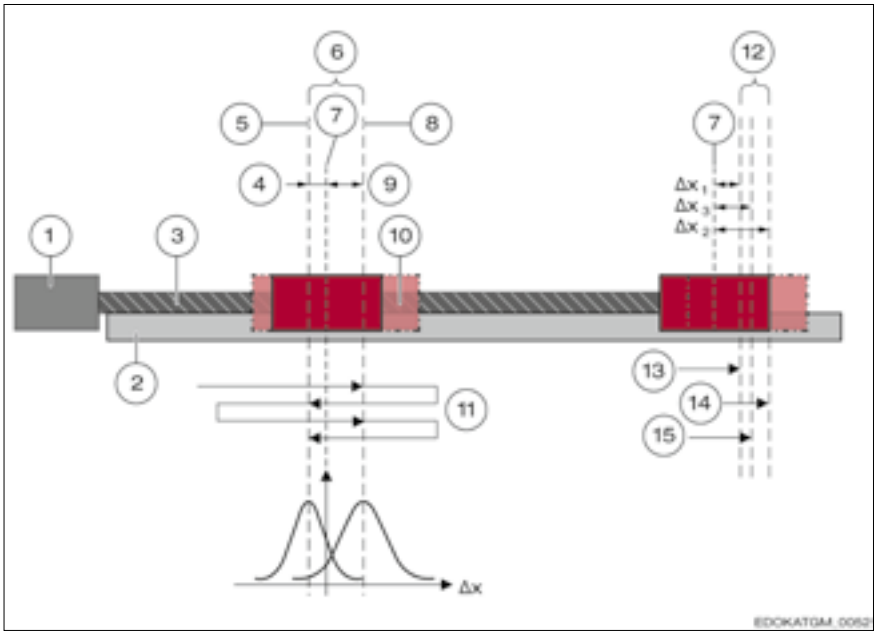

Hysteresis and repeatability of a measuring system:

1 Motor
2 Guide rail
3 Ballscrew
4 Δx_{right}
5 Average position when approaching from the right
6 Hysteresis
7 x_{nom}
8 Average position when approaching from the left
9 Δx_{left}
10 Carriage
11 Approach route
12 Repeatability
13 1. start up
14 2. start up
15 3. start up

Referencing

Incremental measuring systems such as AMS-3B and -4B cannot determine the absolute position after being switched on, which is why another magnetic track is added to the incremental track, the reference track. An individual reference point, a reference point grid or distance-coded reference points can be imposed upon this reference track. A reference move is required to reference the system.
The counter can then modify the internal counter to a specified value using the reference signal. In so doing, the counter identifies a predefined position for the incremental signals in relation to one another, this is usually SIN = COS and both greater than zero and as additional information REF = "high". The figure shows the inverted signal path, which means that the negative values of the signals are illustrated.

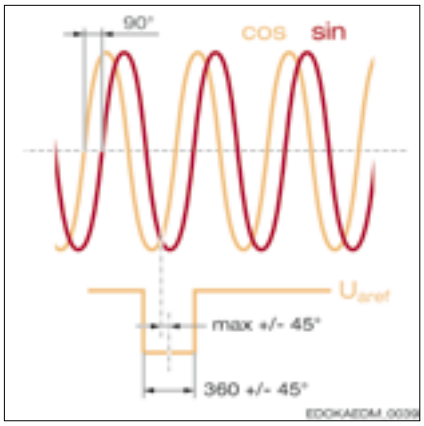

Analogue voltage interfaces TSU/TRU/TMI with a signal period of 200 µm

U_{aref} Starting voltage of the reference signal

Individual reference point

An individual reference point represents the simplest feature of a reference track, it can be imposed at any point along the scale.
With SCHNEEBERGER a reference point consists of three magnetic reference marks, which are sampled with one individual MR bridge without averaging.
One piece of reference data represents the rising edge, another one the falling edge of the reference pulse. The third piece of reference data is redundant and is used to increase the operational reliability of the reference point identification system.

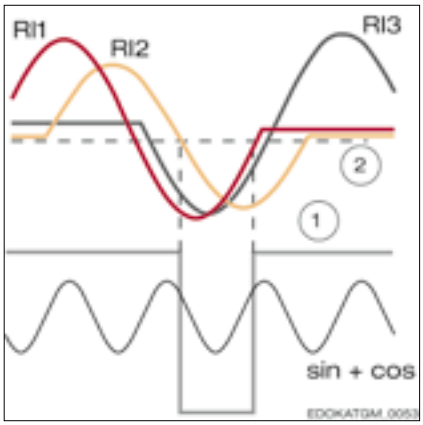

1 R_{out} = Reference track
2 Threshold

RI1 Reference information 1
RI2 Reference information 2
RI3 Reference information 3

Reference point identification system

Reference point grid

In the case of a reference point grid, multiple reference points are imposed at equal distances along the scale. The customer selects from these reference points one, which it will be using for referencing the axis.
The advantages of a grid compared to an individual reference point are firstly a shortened reference journey, thanks to targeted application of external additional elements (cams, proximity switches, amongst other things), but also the ability to be able to operate multiple measuring carriages on one rail. For this, various reference points along the scale are allocated to the different measuring carriages for the referencing in question.

Distance coding

In the case of distance-coded reference points, these are arranged on the scale so that every spacing between two reference points only occurs once. If, for example, you travel over three reference points on the rail in the case of a distance measuring system, the controller is able to work out the absolute position. This represents an industry standard, which is supported by many controller manufacturers. The principle is illustrated later. The value 100 is usually designated as a base period and represents the distance, which needs to be travelled in the worst case scenario to be able to complete the referencing.

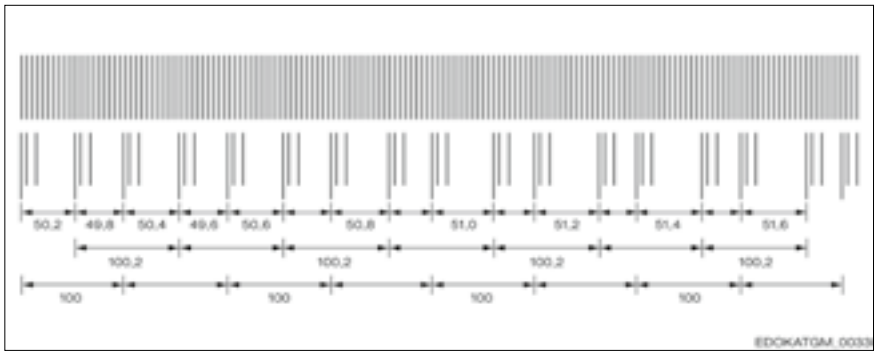

Distance coding

The base period determines the maximum encodable length. For short axes it is sensible to select the base period as being small in order to reduce the maximum necessary travel distance.
That is why SCHNEEBERGER offers customer-specific distance-coded reference points with different base periods for its AMS products.

Absolute coding

For absolute measuring systems, instead of the reference track a track with absolute coding is used. This coding system is either imposed in series on a track or in parallel on multiple tracks. In theory, it should be possible to measure the distance just with this track but as the resolution of this code is relatively small, an absolute coded track is usually combined with an incremental track. Consequently the absolute code defines which signal period the measuring system is located in and the fine resolution within this signal period is obtained by interpolating the incremental signal.
The following graphic provides examples of coded systems.

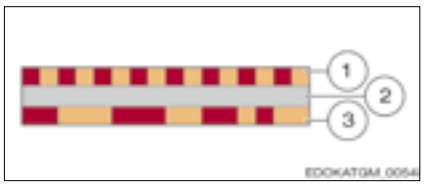

Serial-coded
1 Interpolation track
2 non-magnetized zone
3 absolute track

Parallel-coded - pulse disc

In the case of serially encoded tracks, the absolute position can only be determined by comparing two sequential signal periods. As a result, in spite of the fact that the absolute position is known, two different procedures are being used.
One possibility is to use sensors, which are correspondingly long so that they cover the necessary code to determine the absolute position. As a result they are able to determine the absolute position directly in any position.

The other possibility is to build evaluation electronics on a two-channel basis. One channel, including when the machine is switched off, is always operating (battery-buffered) and determines any change in position of the axis. When switching the machine on, this low-resolution position information is combined with the high-resolution position information from the other channel to achieve a correct absolute position.

SCHNEEBERGER uses battery-buffered scanning for determining the absolute position. For this purpose a specially distance-coded reference track is imposed on the rail as an absolute track. The measuring system determines the distance between three adjacent reference marks during the process and determines the instantaneous absolute position by matching the values determined with a stored matrix.
In the example the three marked reference marks are passed over by the reading head and determines their spacings "1" (code Y) and "5" (code X). These two measured values can then be assigned the absolute position "Pos 1:5" in the two-dimensional matrix.

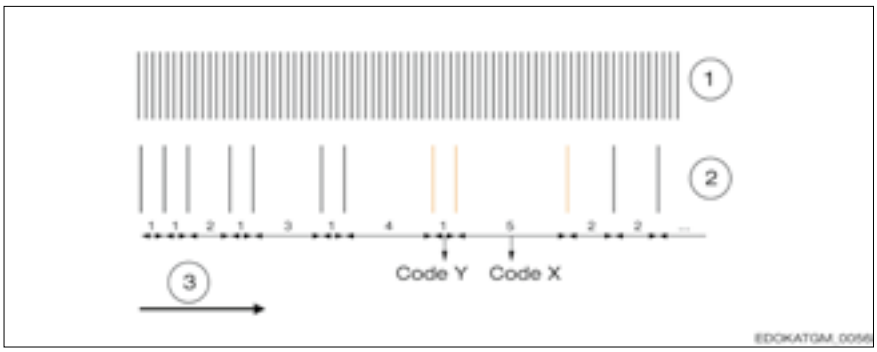

Example for determining position by means of battery-buffered scanning:
1 Incremental track
2 Reference track
3 Sampling direction

One-dimensional distance measuring deviation

Two-dimensional matrix

Code Y/Code X	1	2	3	4	5	...		
1	Pos 1;1	Pos 1;2	Pos 1;3	Pos 1;4	Pos 1;5	...		
2	Pos 2;1	Pos 2;2	Pos 2;3	Pos 2;4	Pos 2;5	...		
3	Pos 3;1	Pos 3;2	Pos 3;3	Pos 3;4	Pos 3;5	...		
4	Pos 4;1	Pos 4;2	Pos 4;3	Pos 4;4	Pos 4;5	...		
5	Pos 5;1	Pos 5;2	Pos 5;3	Pos 5;4	Pos 5;5	...		
...	...	...	...	...	...	Pos Y;X		

To qualify the measuring scale, SCHNEEBERGER uses procedures supporting the "VDI/VDE 2617 Guidelines for using DIN EN ISO 10360-2 for checking distance measurements". In this the focus lies on the attaining the highest possible benefits for the customer in terms of technical specifications. Three different specifications relating to distance measuring deviation are used for the technical data:

- Periodic deviation
- Distance measuring deviation over a 40 mm route
- Distance measuring deviation over a 1 m route

To safeguard the quality of the scale, a limit curve for permitted deviation is created. The limit curve and the measuring deviations of different reference lengths, which the customer typically uses, have been set out in a diagram.
That is why it is permitted to interpolate between the specifications for SCHNEEBERGER measuring systems.

Periodic deviations

All incremental distance measuring systems are accompanied by the effect of a periodic deviation, whose wavelength corresponds exactly to the graduation spacing or a fraction of the graduation spacing. This periodic deviation or also short-wave deviation occurs due to small deviations in the sensors or electrical signal processing. The sine and cosine signals deviate in this from the mathematical exact form. Deviations can be classified depending on the arrangement (harmonics).

KWF period	Deviation occurs due to
1 signal period	Sine/cosine offset
1/2 signal period	Sine and cosine amplitude are different
1/3 - 1/8 signal period	Sensors deliver a signal which is fundamentally different from the sine wave shape.

Interpolation error

If periodic deviations only occur during digitization and calculation of position, then we talk about an interpolation error. This can very easily be the case under certain circumstances when the transmitter and receiver circuitry are not precisely matched with one another.

Comparator error

The comparator error, also referred to as the Abbe error, is a systematic deviation, which occurs when the axis of the length standards do not coincide with the axis of the distance standards. The causes for the deviation are minute rotary movements in the axis design, which influence the measuring result.

3.2.1 Incremental interfaces

Analogue voltage interface (1 V_{ss}), products AMSA-3B, AMSA-4B, AMSA-3L
Signal reading head for analogue systems, operational amplifier output, completely differentiated output

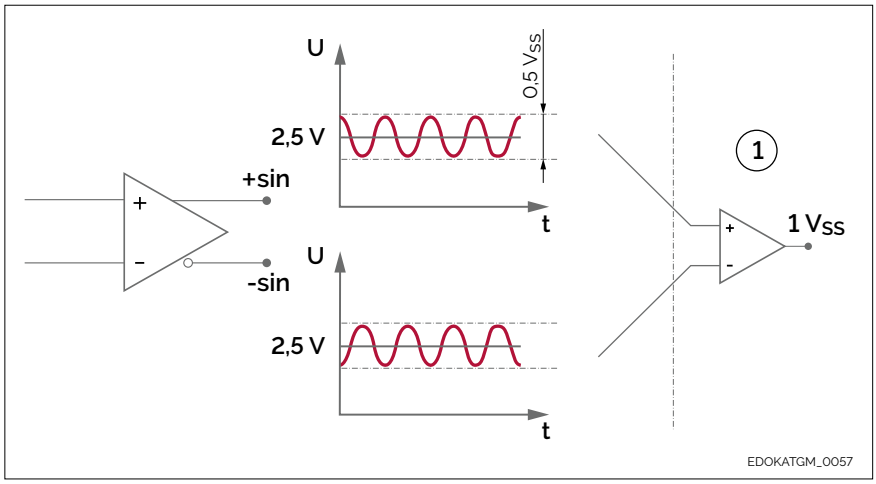

Signal reading head for analogue systems, operational amplifier output, differential output with fixed reference voltage

1	Receiver	t	Time
U	Voltage	V_{ss}	1V peak-peak

This interface guarantees secure data transmission and is thus most frequently used for incremental measurements. The incremental signals sine and cosine are offset 90° in their phasing. The signal period is 0.2 mm. Because of the signal voltage adjustment AGC (Automatic-Gain-Control), the level following differential gain of the incremental signals and of the reference signal are always constantly 1 +/- 0,2 V_{ss}. Depending on the controller, the switch-off limit is approx. 0.4 V_{ss} to 1.6 V_{ss}.

The reference pulse is set symmetrically to the intersection of sine and cosine (at 45°). The width and phasing of the reference pulse are limited as shown in the figure. When evaluating the signal, the precision of the reference point can thus be increased by the additional use of the incremental information. This interface works with all standard controllers that support a 1 VSS voltage interface. The terminating resistor should be 120 Ohm. The maximum cable length of the reading head is 30 m.

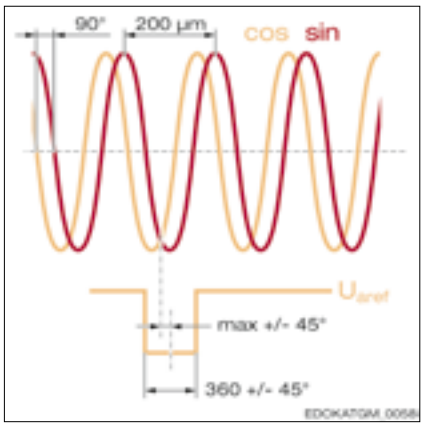

Signal waveform of the analogue voltage interface, shown inverted, with a signal period of 200 µm.

Pin layout

TSU/TRU/TMU interfaces

Contact	Signal	Signal type
1	- Ua2	- Cosine
2	+ 5 V sensor	Supply voltage feedback
3	+ Ua0	Reference signal
4	- Ua0	Reference signal
5	+ Ua1	+ Sine
6	- Ua1	- Sine
7	- Uas	NC
8	+ Ua2	+ Cosine
9	-	NC
10	0 V (GND)	Supply voltage
11	0 V sensor	Supply voltage feedback
12	+ 5 V	Supply voltage

The pin layout is compatible with many standard linear measuring systems.
For pin layout, see SCHNEEBERGER MONORAIL and AMS product catalogue.

Digital interface, products AMSD-3B and AMSD-4B

Fully differential interface in accordance with EIA-RS 422.
In the case of the digital reading head interface a pair of wires is used to transmit the signals A+ and the inverted signals A-. In the same way B+, B- and the reference signals R+, R- are transmitted differentially. An DS34C87TM-type output driver from National Semiconductor is used for this.
The advantage of differential transmission is that interference immunity is enhanced by symmetrical transmission with inverted signals.

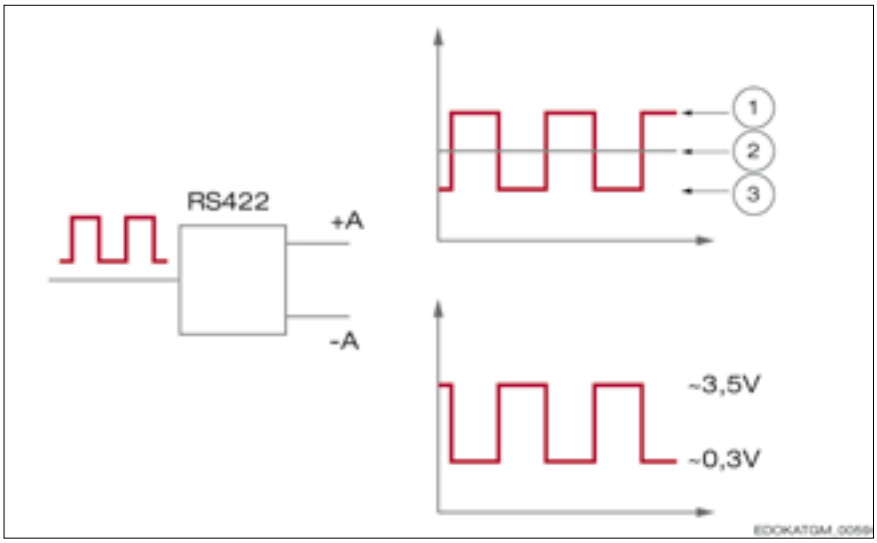

Digital systems
1 high Mode
2 common Mode
3 low Mode

The figure shows the positive signals. The levels of the individual signals are:
High = 2.5 V- 5V
Low = 0 V- 0.5 V
Rise and fall times are less than 20 ns. The minimum edge spacings (x) can be calculated from the set maximum output frequency and the resolution. The downstream electronics must be able to process the maximum output frequency reliably. The maximum programmable output frequency of the reading head is 8 MHz. Resolutions of 0.2 µm/1µm/5µm can be set.

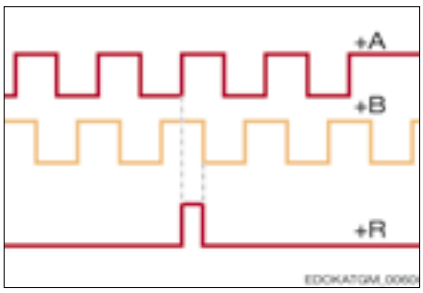

Signal waveform of the digital interface

Digitale Schnittstelle, Produkte AMSD-3B und AMSD-4B

TSD/TRD/TMD interfaces

Contact	Signal	Signal type
1	- Ua2	Quadrature signal
2	+ 5 V sensor	Supply voltage feedback
3	+ Ua0	Reference signal synchronized
4	- Ua0	Reference signal synchronized
5	+ Ua1	Quadrature signal
6	- Ua1	Quadrature signal
7	- 0as	Interference signal active low, minimum duration 20 ms
8	+ Ua2	Quadrature signal
9	-	NC
10	0 V (GND)	Supply voltage
11	0 V sensor	Supply voltage feedback
12	+ 5 V	Supply voltage

3.2.2 Absolute interfaces

Products AMSABS-3B and AMSABS-4B

The signals are transmitted fully differentially according to the interface standard EIA - RS 485. An output driver SN75LBC176AD from Texas Instruments is used for this.

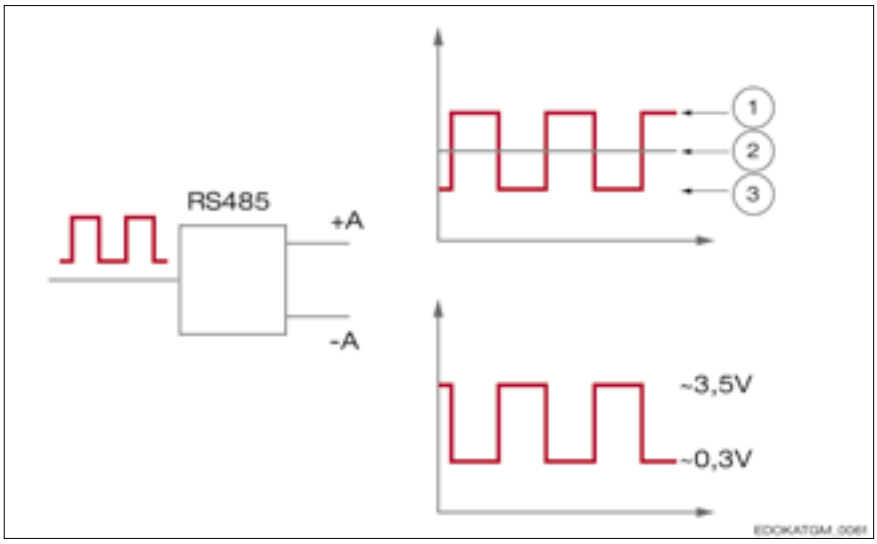

Absolute interfaces:
1 high Mode
2 common Mode
3 low Mode

A pair of wires is used to transmit an inverted signal and a non-inverted signal. At the receiver the original signal is generated by creating the difference based on the difference between the two voltage levels. The advantage of this form of data transmission is in its enhanced interference immunity.
A 120 Ohm terminating resistor should be used.

Pin layout

RS 485 only records the electrical properties of the interface. The protocols and the pin layouts are application-specific. SCHNEEBERGER uses the following pin layouts for its absolute interfaces:

Pin layout

TRH/TMH interfaces

Contact	Signal	Signal type						
1	+ 5 V sensor	Supply voltage feedback						
2	-	NC						
3	-	NC						
4	0 V sensor	Supply voltage feedback						
5	-	NC						
6	-	NC						
7	+ 5 V or 24	Supply voltage						
8	+CLK	+ cycle						
9	-CLK	- cycle						
10	0 V (GND)	Supply voltage						
11	-	NC						
12	+ Ua2	+ Cosine						
13	- Ua2	- Cosine						
14	+ DATA	+Data						
15	+ Ua1	+ Sine						
16	- Ua1	- Sine						
17	- DATA	- Data						

SCHNEEBERGER offers the SSI and SSI + 1 V_{SS} transmission protocols for its AMSABS products.

Synchronous-Serial Interface (SSI)

The synchronous-serial interface consists of two channels (2x2 "twisted pair" wires) The first channel (cycle) transmits a clock signal from the downstream electronics to the measuring system. The second channel (data) transmits the measuring system information in the form of data words synchronously from the measuring system to the downstream electronics. Each data word consist of up to 32 bits, which contain the complete absolute position, which is represented in binary or in grey code, and optionally up to three configurable special bits (bits 3, 2 and 1). A special bit can be an error, warning or parity bit. In this way, errors can be detected more quickly and the system can operate safely and reliably. This product can be connected to commercially-available controllers with a synchronous-serial interface.

A position is transmitted as follows:
The downstream electronics issues the command upon the first falling edge in the clock signal (1) to start the data transmission (2) to the measuring system. With each subsequent rising cycle edge a data bit is then transmitted from the measuring system to the downstream electronics. After transmitting the last bit, the "least significant bit", the data transmission and the cycle stops. The data signal is then set to "low for a defined time tm" and then jumps to "high". Only upon the next rising edge (4) can a new data transmission commence.

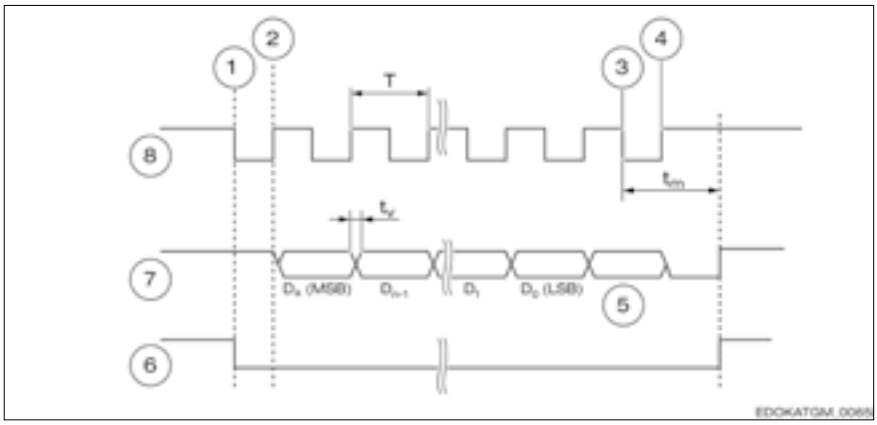

Example of transmitting a position:

1	first falling edge in the clock signal
2	start of the data transmission
3	last falling edge in the clock signal
4	next rising edge
5	Special
6	Monoflop P/S
7	Data serial
8	Cycle
T	Period duration of the clock signal
tm	Monoflop time (between 10 µs and 30 µs)
tV	100 ns

Synchronous-serial interface with analogue signal (SSI + 1 V_{ss})

The synchronous-serial interface with analogue signal is different from the other absolute interfaces in the way that in principle it is made up of an incremental and a digital interface. The incremental signals are used to determine the position with a high level of precision. The absolute information is used to determine the position values. The incremental and the absolute position are determined in separate parts of the circuit.
As a result a more consistent comparison of the two signals is possible. As a result of the redundant processing of signals, the operating reliability of the system is significantly increased.

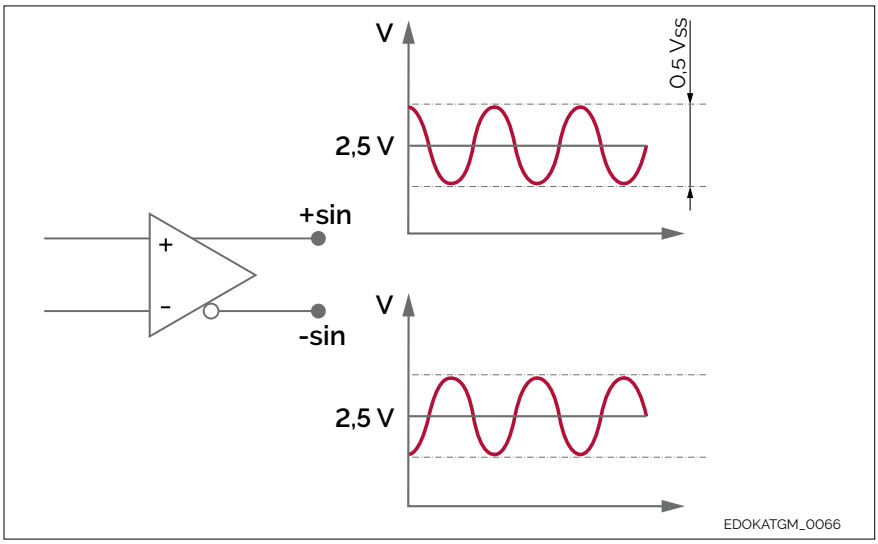

Signal waveform of the synchronous-serial interface with analogue signal, connection between the SSI values and the analogue signals:

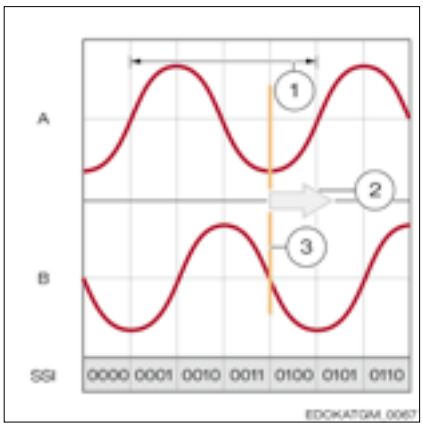

1 Signal period 360° electrical
2 Direction with rising values
3 Location of the zero position of the SSI absolute value

Illustration for 11-bit multi-turn and 2-bit single-turn, in the case of 4 quadrant evaluation.
Track A, track B and SSI value with 11-bit multi-turn, 2-bit single-turn (4 quadrates/period)

Sine and cosine occur in the same period, the single turn value is then always 0. In the controller the last two bits are cut off, and only the multi-turn is counted and the high-resolution single-turn component is inserted.
Parameter lists for use with specific controllers are available on request.

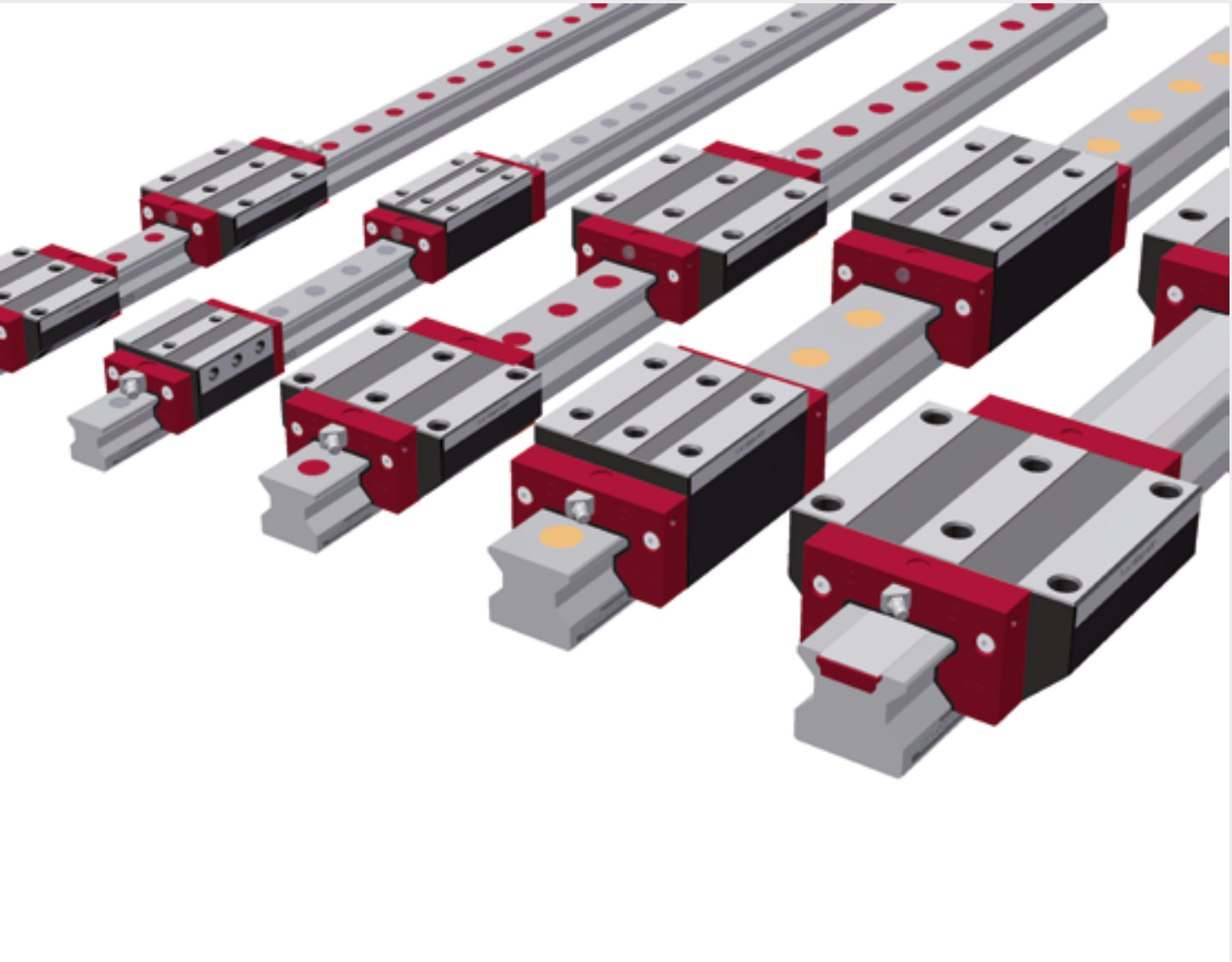

SCHNEEBERGER
LINEAR TECHNOLOGY

4	**Development and design: Guiding**	**81**
4.1	**Factors influencing the choice of product**	**85**
4.1.1	Choice of product	85
4.1.2	Influencing factors	85
4.2	**Ball to Roller comparison**	**86**
4.2.1	Characteristics	86
4.2.2	Fields of application	87
4.3	**Guide rail types**	**88**
4.3.1	Guide rail types - overview	88
4.3.2	Characteristics and selection criteria	90
4.4	**Carriage types**	**93**
4.4.1	Carriage types - overview	93
4.4.2	Characteristics and selection criteria	95
4.5	**Preload**	**97**
4.5.1	Definition and purpose	97
4.5.2	Preload classes	98
4.5.3	Areas of application	98
4.6	**Accuracy**	**100**
4.6.1	Accuracy classes	100
4.6.2	Dimensional tolerances	101
4.6.3	Running accuracy	105
4.7	**Installation methods for guide systems**	**106**
4.7.1	Selection criteria	106
4.7.2	Installation variants	106
4.8	**Calculation and sizing**	**109**
4.8.1	Principles	109
4.8.2	Calculating service life	111
4.8.3	Calculating the static reliability factor S_0	114
4.8.4	Calculation program for the dimensioning MONORAIL	114
4.8.5	Sample data sheet for an x-/y-table	116
4.8.6	Sample machine drawing for an x-/y-table	117
4.9	**Attaching the guide rail**	**119**
4.9.1	Methods of attachment	119
4.9.2	Rail options	119
4.9.3	Closures for fixing holes	120
4.9.5	Tolerances for guide rail length and guide rail fixing holes for N-, ND-, NU-, NUD-, C- und CD-type guide rails	122
4.9.4	Permissible screw tightening torques	122
4.9.6	Permissible lateral force without locating surface	123
4.9.7	Permissible tensile forces and transverse torques	124
4.9.8	Accuracyinfluencing factors	124
4.10	**Multi-part guide rails**	**125**
4.10.1	Combined guide rails and butt joints	125
4.10.2	Installation and markings	125

4.11	**Fastening carriages**	**126**
4.11.1	Methods of attachment	126
4.11.2	Lateral locating surfaces	127
4.11.3	Permissible lateral force without locating surface	127
4.11.4	Influence of the number fastening screws on rigidity	128
4.11.5	Permissible screw tightening torques	128
4.11.4	Permissible screw tightening torques	128
4.11.6	Minimum screw depth	129
4.12	**Configuration of the connecting structure**	**130**
4.12.1	Lateral locating surfaces	130
4.12.2	Methods of orientation for the rail	131
4.12.3	Lateral locating surfaces	131
4.12.4	Installation methods	132
4.12.5	Geometrical and position accuracy of the support surfaces	134
4.13	**Lubrication**	**137**
4.13.1	Lubrication in its delivered condition	137
4.13.2	Initial lubrication and subsequent lubrication	137
4.13.3	Lifetime lubrication	138
4.13.4	Precautionary measures	138
4.13.5	Lube connections	139
4.13.6	Lubrication with grease	142
4.13.7	Lubrication with oil	143
4.13.8	Application know-how on lubrication - requirements in respect of lubrication in special operating conditions.	144
4.13.9	Lubrication plate SPL	150
4.14	**Seal**	**152**
4.14.1	Standard - seals	152
4.14.2	Additional wipers	154
4.14.3	Bellows	156
4.14.4	Application of sealing systems	160
4.15	**Corrosion protection**	**161**
4.15.1	Coatings	161
4.15.2	MONORAIL BM in its stainless steel model (WR, SR)	162
4.16	**Additional functionality of clamps and brakes**	**165**
4.16.1	Clamping and braking components - construction and areas of use	165
4.16.2	Types of clamping and braking components	165
4.16.3	Overview of types	166
4.17	**SCHNEEBERGER Download and On-line CAD catalogue**	**167**
4.17.1	SCHNEEBERGER Downloads	167
4.17.2	On-line CAD catalogue	167

4.1.1 Choice of product

A SCHNEEBERGER MONORAIL guideway should be selected in several stages. The following parameters should be determined as part of this process.

- Type of guideway: roller - ball
- Additional functions: measuring, driving
- Size and number of carriages or guide rails
- Type of guide rails and carriages
- Accuracy class
- Preload class
- Lubrication type and connections
- Guide rail and carriage accessories
  - Protective elements (wipers, bellows)
  - Closures for the guide rail (plugs, cover strip)
  - Lubricating accessories
  - Clamping/brake elements

4.1.2 Influencing factors

Selecting an appropriate guideway depends on the requirements of the application, the operating conditions and on external influences. These factors must be determined at the start of the process of selecting a product.

Application

- Type of application
- Additional functions: measuring, driving, braking
- Required accuracy and rigidity
- Type of drive
- Installation orientation and installation space
- Length of travel
- Masses moved

Operating conditions

- Forces
- Speed and acceleration
- Distances travelled, short travel
- Period of use and cycles
- Coolants, swarf
- Maintenance

Environmental conditions

- Dirt
- Temperature
- Humidity
- Cleanroom or vacuum

4.2.1 Characteristics

Depending on the application, different requirements are stipulated in respect of the SCHNEEBERGER MONORAIL guideways. The advantages of the roller guideways mainly apply for applications in which a high load carrying capacity and rigidity as well as an extended service life are required or for applications with limited installation space.
Because of the smaller masses being moved, the advantages of the ball guideways lie in dynamic applications, in other words in high speeds and accelerations or in increased requirements in respect of noise build-up and push force. Otherwise they offer cost benefits compared with the roller and optimal adaptation to the structural conditions due to their greater selection of structural shapes.

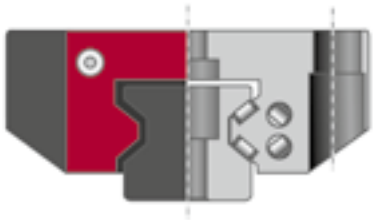

Technical characteristics:
- 4 roller tracks in O-geometry rollers with a spherical surface
- Fully sealed carriages
- Main dimensions in accordance with DIN 645-1
- Wide range of designs and lubricating options
- Numerous accessories for a wide range of applications

Main fields of application:
Machine tools for high cutting performance and extended service life, machines/ devices with very small installation dimensions, CNC machining centres, CNC lathes, CNC grinding machines, eroding machines, injection moulding machines

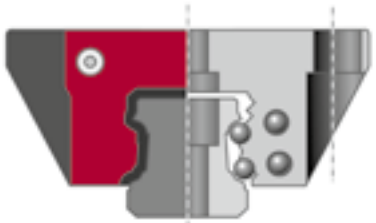

Technical characteristics:
- 4 rows of balls with 2-point contact in O-geometry,
- Optimised track geometry with a low number of transitions,
- Low number of individual components,
- Reduced maintenance thanks to integral lubrication reservoirs,
- Complete carriage seal,
- Trapezoidal guide rail profile for high rigidity and easy replacement of parts subject to wear,
- Main dimensions in accordance with DIN 645-1.

Main fields of application:
Machine tools for small and medium-sized cutting performance, secondary axes, woodworking machines, sheet metal processing machines, water jet / laser cutting systems, automatic punching presses, robotics, handling devices and automation technology, electronics and semiconductor technology, measuring technology, medical technology

Characteristic	Roller MONORAIL MR	Ball MONORAIL BM
Load carrying capacity	••••	••
Rigidity	••••	•••
Accuracy	••••	••••
Service life	••••	•••
Running characteristics/ Pulsation	••	••••
Friction behaviour	••	••••
Permissible speeds	•••	••••
Installation and serviceability	•••	••••
Requirements in respect of accuracy and rigidity of the surrounding structure	high	medium
Integrated distance measuring system	yes	yes
Integrated rack	no	yes

Note: • = satisfactory, ••• = very good

4.2.2 Fields of application

Roller guideways

are typically used in

- Machine tools for high cutting performance and for extended service life
- Machines and devices with very small installation dimensions
- Machining centres
- Drilling centres
- CNC lathes
- CNC grinding machines
- Eroding machines
- Injection moulding machines
- Forming technology

Ball guideways

are used, for example, in

- Machine tools for small and medium-sized cutting performance
- Secondary axes
- Woodworking machines
- Sheet metal processing machines
- Water jet and laser cutting systems
- Automatic punching presses
- Robotics
- Handling devices and automation technology
- Electronics and semiconductor technology
- Measuring technology
- Medical technology

4.3.1 Guide rail types - overview

The guide rail types mainly differ in terms of their method of attachment, which also defines the closure options for the fixing holes. In addition to this there are other different fixing hole spacings and hardness characteristics. The table provides an overview of the types for MONORAIL MR with roller and MONORAIL BM/BZ with ball. For available sizes, see SCHNEEBERGER MONORAIL and AMS product catalogue.

Product overview of MR guide rails

		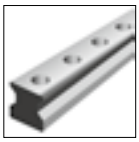					
Sizes/ Guide rail types	**N** standard	**ND** standard, fully hardened	**NU** with fixing from below	**NUD** with fixing from below, fully hardened	**C** for cover strip	**CD** for cover strip, fully hardened	
Size 25	MR S 25-N	MR S 25-ND	MR S 25-NU		MR S 25-C	MR S 25-CD	
Size 35	MR S 35-N	MR S 35-ND	MR S 35-NU	MR S 35-NUD	MR S 35-C		
Size 45	MR S 45-N	MR S 45-ND	MR S 45-NU		MR S 45-C		
Size 55	MR S 55-N		MR S 55-NU		MR S 55-C		
Size 65	MR S 65-N		MR S 65-NU		MR S 65-C		
Size 100	MR S 100-N						
Special characteristics							
screwable from above	•	•			•	•	
screwable from below			•	•			
minimal assembly effort			•	•	•	•	
large one-piece System lengths	•		•		•		
for use in case of swarf				•			
For supporting covers		•		•			

Note: • = applicable

Product overview BM guide rails

Sizes/ Guide rail types			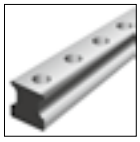					
	N standard	**ND** standard, fully hardened	**NXD** standard, half fixing hole spacing, fully hardened	**NU** with fixing from below	**C** for cover strip	**CD** for cover strip, fully hardened		
Size 15		BM S 15-ND	BM S 15-NXD			BM S 15-CD		
Size 20	BM S 20-N			BM S 20-NU	BM S 20-C			
Size 25	BM S 25-N			BM S 25-NU	BM S 25-C			
Size 30	BM S 30-N			BM S 30-NU	BM S 30-C			
Size 35	BM S 35-N			BM S 35-NU	BM S 35-C			
Size 45	BM S 45-N			BM S 45-NU	BM S 45-C			
Special Characteristics								
screwable from above	•	•	•		•	•		
screwable from below				•				
minimal assembly effort				•	•	•		
high-precision installation without lateral locating surface			•					
large one-piece System lengths	•			•	•			
For supporting covers		•	•					

Note: • = applicable

4.3.2 Characteristics and selection criteria

Attaching

With guide rails a distinction is made between two types of main attachment.
Standard rails -N- and the rails for cover strips -C- have continuous fixing holes for fastening from above. In the case of N-rails the fixing holes are closed with plugs, and in the case of the C-rail with a cover strip.
There are also guide rails with tapped fixing holes on the bottom for fastening from below. These guide rails are characterised by a -U- in the type description. They offer the advantage of being a completely smooth wiping surface and that no closure components are required for the guide rail fixing holes. They are mainly used for connecting structures with access from below, for cost-effective installation and for extended service life of the wipers.
The -D- suffix to the type description identifies a fully hardened guide rail, an -X- in the case of MR rails identifies double, and for BM rails half the hole spacing for fixing holes.

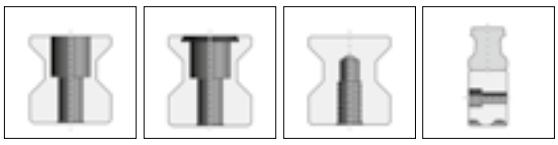

Type/ Attachment	N, ND	C, CD	NU, NUD	NX (BZ)				
from above	•	•						
from below			•					
from the side				•				

Note: • = applicable

Guide rails with lateral fixing represents the fourth variant. This is used for MONORAIL BZ toothed systems. In this instance the fixing holes are outside the range of motion of the carriages offering the advantage that the fixing holes are very easily accessible and to protect the wipers do not need to be closed.

Rail lengths

Maximum single piece L3 guide rail lengths

MONORAIL rails are manufactured as a single component in maximum lengths according to the following table. Longer guide rails consist of several individual components butt-joined in which the joints are always located centrally between two fixing holes.
Rail ends of individual components, which abut one another, are ground on their front faces and have a special chamfer. External guide rail ends and the ends of one-piece guide rails are separated and deburred at the front end.

Maximum one-part guide rail length L3 (lengths in mm)

Type/hardness procedure	15	20	25	30	35	45	55	65
MR inductive single-part			6000*		6000	6000	6000	6000
inductive multi-part			4000*		4000	4000	4000	4000
fully hardened			2000		2000	2000	1800	1800
BM inductive single-part		3000	6000	6000	6000	6000		
inductive multi-part		3000	4000	4000	4000	4000		
fully hardened	1500							
BZ inductive			6000		6000			

Note:* MR 25-C guide rail for MAC cover strip max. 3000 mm

Standard guide rail lengths

The standard guide rail lengths for MONORAIL MR and BM are

$$L3 = n \cdot L4 - 2\ mm$$

EDOKAEDF_0216

L3 Rail length (mm)
n = 3, 4, 5...
L4 Fixing hole pitch (mm)

for MONORAIL BZ

$$L3 = n \cdot L4$$

EDOKAEDF_0217

L3 Rail length (mm)
n = 3, 4, 5...
L4 fixing hole division (mm)

Guide rails in special lengths

In case of deviations in the standard guide rail lengths set out above, the guide rail length for MONORAIL MR and BM can be calculated using the following formula:

$$L3 = n \cdot L4 + L5 + L10$$

EDOKAEDF_0218

L3 Rail length (mm)
n = 3, 4, 5...
L4 fixing hole division (mm)
L5 Initial fixing hole spacing (mm)
L10 End fixing hole spacing (mm)

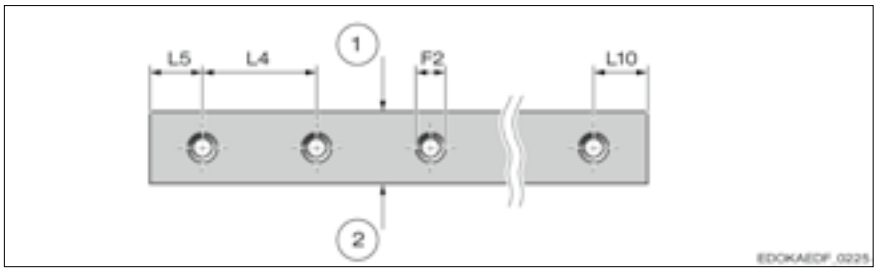

Guide rail:
1 Locating side
2 Attachment side
F2 Counterbore diameter (mm)

L4 Fixing hole division (mm)
L5 Initial fixing hole spacing (mm)
L10 End fixing hole spacing (mm)

In so doing the following values should be observed for start fixing hole spacing L5 and for end fixing hole spacing L10:

$$L5_{max}, L10_{max} = L4 - (F2/2 + 1\ mm)$$

EDOKAEDF_0219

L5 Initial fixing hole spacing (mm)
L10 End fixing hole spacing (mm)
L4 Fixing hole division (mm)
F2 Counterbore diameter (mm)

$$L5_{min}, L10_{min} = F2/2 + 1\ mm$$

EDOKAEDF_0220

L5 Initial fixing hole spacing (mm)
L10 End fixing hole spacing (mm)
F2 Counterbore diameter (mm)

In the case of MONORAIL BZ, the following set values apply for L5 and L10:

$$L5 = L10 = L4/2$$

EDOKAEDF_0221

L5 Initial fixing hole spacing (mm)
L10 End fixing hole spacing (mm)
L4 Fixing hole pitch (mm)

Surface hardness

As standard the side surfaces and tracks of the MONORAIL guide rails are inductively hardened. These guide rails are recommended for normal applications, for large-scale system lengths and if fixing holes need to be incorporated into the guide rail retrospectively, e.g. for pins or for fastening bellows.
In the event that a hardened guide rail upper surface is required, e.g. to support shoes for covers or because the guide rails are being used in an open machining area, through hardened variants are also available. In ND, NUD and CD types, the "D" stands for through harDened.

Guide rail cover

Depending on the type of guide rail, the guide rail fixing holes can be closed in different ways.
For this purpose SCHNEEBERGER a variety of components for each specific application. The following table provides an overview of the variants on offer and their specific characteristics:

Guide rail covers

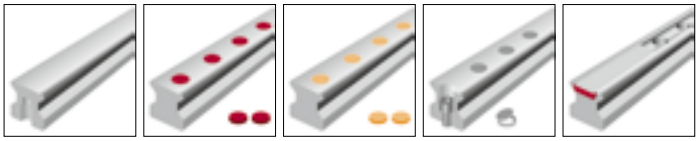

Guide rail types/ order code	U-rail*	Plastic plugs	Brass plugs	Steel plugs	Cover strip
MONORAIL MR	•	MRK	MRS	MRZ	MAC
MONORAIL BM	•	BRK	BRS		BAC
MONORAIL BZ		BRK			
Characteristics					
Costs low	•	•			
medium			•		
high				•	•
Assembly effort low	•				•
medium		•		•	
high			•		
Available space needed at guide rail ends					•
Can be re-used					•
High mechanical loading capacity	•		•	•	
Operating conditions Liquids	•	•	•	•	
Dirt, fine	•	•	•		•
Swarf, coarse	•	•	•	•	
hot particles	•		•	•	•
Ease of disassembly medium				•	
good			•		
very good		•			•

Note: • = applicable, * = Fastening from below - no rail cover required

4.4.1 Carriage types - overview

When selecting the carriage type in addition to the load carrying capacity of particular importance are fastening type and available installation space. The table provides an overview of the types for MONORAIL MR with roller and MONORAIL BM with ball. For available sizes, see SCHNEEBERGER MONORAIL and AMS product catalogue. All carriage types match DIN 645 in terms of external dimensions and position of the lubrication fixing holes and are therefore interchangeable.

Product overview BM carriages

Sizes/ carriage types	**A** standard	**B** standard, long	**C** compact, high	**D** compact, high, long	**E** compact, high, for lateral fixing	**F** compact	**G** compact, long
Size 15	BM W 15-A		BM W 15-C			BM W 15-F	
Size 20	BM W 20-A	BM W 20-B	BM W 20-C	BM W 20-D			
Size 25	BM W 25-A	BM W 25-B	BM W 25-C	BM W 25-D	BM W 25-E	BM W 25-F	BM W 25-G
Size 30	BM W 30-A	BM W 30-B	BM W 30-C	BM W 30-D	BM W 30-E	BM W 30-F	BM W 30-G
Size 35	BM W 35-A	BM W 35-B	BM W 35-C	BM W 35-D	BM W 35-E	BM W 35-F	BM W 35-G
Size 45	BM W 45-A	BM W 45-B	BM W 45-C	BM W 45-D		BM W 45-F	BM W 45-G
Special characteristics							
screwable from above	•	•	•	•		•	•
screwable from below	•	•					
screwable from the side					•		
for high forces and moments		•		•			•
for medium forces and moments	•		•		•	•	
for limited-space installation conditions						•	•

Note: • = applicable

Product overview of MR carriages

Sizes/ carriage types	**A** standard	**B** standard, long	**C** compact, high	**D** compact, high, long	**E** compact, high, for lateral fixing	**F** compact	**G** compact, long
Size 25	MR W 25-A	MR W 25-B	MR W 25-C	MR W 25-D	MR W 25-E	MR W 25-F	MR W 25-G
Size 35	MR W 35-A	MR W 35-B	MR W 35-C	MR W 35-D	MR W 35-E		
Size 45	MR W 45-A	MR W 45-B	MR W 45-C	MR W 45-D		MR W 45-F	
Size 55	MR W 55-A	MR W 55-B	MR W 55-C	MR W 55-D			MR W 55-G
Size 65	MR W 65-A	MR W 65-B	MR W 65-C	MR W 65-D			
Size 100		MR W 100-B					
Special characteristics							
screwable from above	•	•	•	•		•	•
screwable from below	•	•					
screwable from the side					•		
for high forces and moments		•		•			•
for medium forces and moments	•		•		•	•	
for limited-space installation conditions						•	•

Note: • = applicable

4.4.2 Characteristics and selection criteria

Attachment

All carriage types have 6 tapped fixing holes and/or through fixing holes for fastening. For carriages, they are designed as blind holes incorporating a compact cross-section (type C, D, F and G) and allow fixing from above and in the case of the E-type from the side.

Carriage types A and B have through tapped fixing holes. They allow fixing from above and below. Fixing from above achieves a more rigid attachment thanks to the larger screw diameter.

When fixing from below it is important to note that screws with a low head are used in accordance with DIN 6912 for medium-sized fixing holes and, if present, the plastic protective plugs have to be removed from the middle carriage fixing holes.

It is important to have a completely flat support for the mounting surface when fastening the carriage. Otherwise the evenness of the supporting surface needs to comply with the specification set out in Section 4.14.5 - Geometrical and position accuracy of the supporting surfaces, otherwise deformation of the carriage will be caused, which can result in a change in the preload of the carriage.

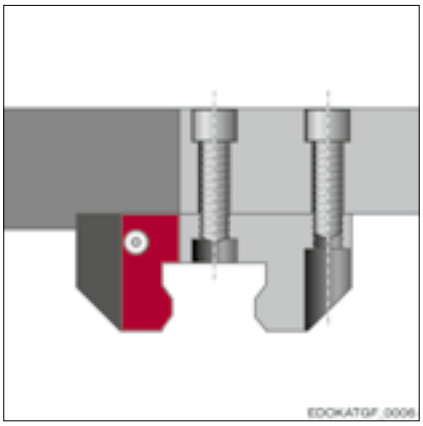

Carriages with continuous tapped fixing holes fastened from above

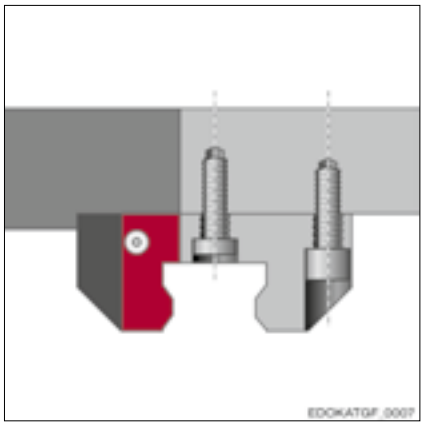

Carriages with continuous tapped fixing holes fastened from below

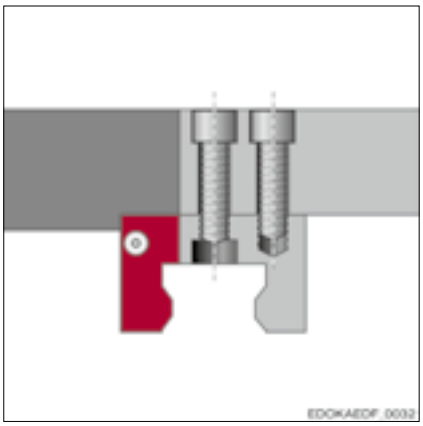

Carriages with blind fxing holes fastened from below

Replaceability
The carriages of a single size can be replaced. The preload is maintained. The carriages have different screw hole template depending on the type. Carriage types A and B are an exception to this. In spite of their different length, they have the same drilling template, which makes it possible to interchange them. Thus, for example, short (A) and long (B) carriages can be interchanged without having to modify the machine slide. This is not possible with all other carriage types.

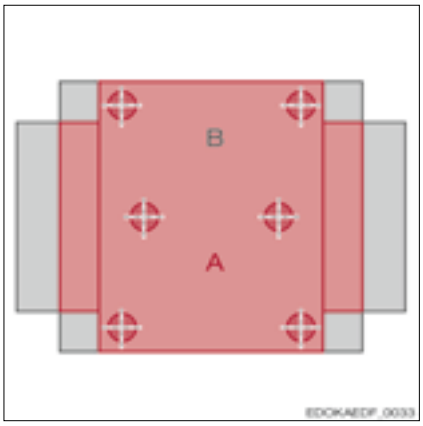

Screw drilling templates for carriage type A and B

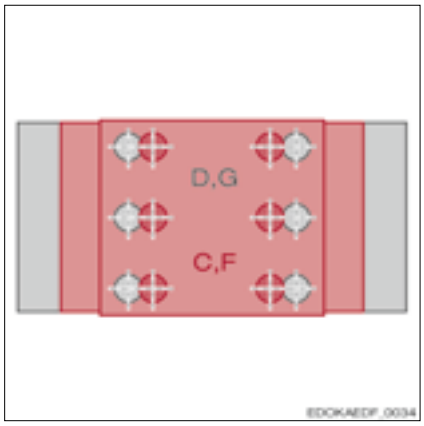

Screw drilling templates for carriage type C, D, F and G

Types D, G and C, F have identical drilling templates, but different carriage heights.

Rigidity
In terms of the rigidity when loading with forces and moments, long carriages (type B, D and G) achieve the best values based on the large number of load bearing rolling elements.
The carriage cross-section plays a significantly lesser role, particularly as the carriage stiffness in its bolted in state is to a large part achieved by means of the surrounding structure. For this it is important particularly for tensile loads to achieve a rigid connection between the carriage body and the surrounding structure. SCHNEEBERGER offers 6 fixing holes for all its carriage types. This ensures that a significantly more rigid connection is achieved than with 4 fastening screws.
For lateral loading types A and B are preferred as better later stiffness is achieved thanks to the flange structure.

Accuracy
If a high level of running accuracy needs to be achieved, or when using multi-part guide rails, we recommend using long carriage types B, D and G, as these have a lower travel pulsation than short A, C and F and more effectively balance out levels of unevenness in the guide rail, e.g. due to deformations resulting from the screw forces or tolerances on the butt transition joints.
Short carriage types are preferred when a greater resilience and tolerance is required in relation to angle errors to balance out inaccuracies in the connecting structure.

4.5.1 Definition and purpose

SCHNEEBERGER MONORAIL guideways are preloaded to facilitate zero-backlash movement when loaded and to increase the rigidity of the guideway. At the same time, the preload also affects service life, displacement resistance and vibration behaviour of the system.
The preload is generated in the carriage by using oversized rolling elements, as a result of which the steel body of the carriage is elastically bent. The restoring force generated as a result matches the preload force.
The preload is specified in this as the percentage share of dynamic loading capacity C.

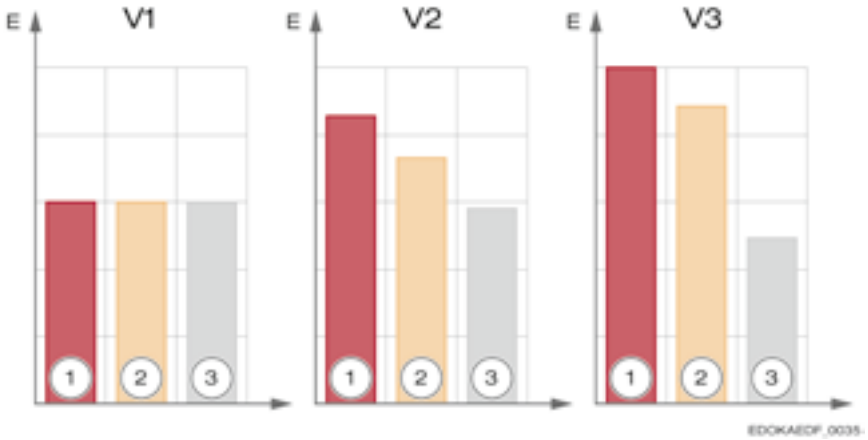

The effects E of the respective preload of the guideways on
Rigidity
Displacement resistance
Service life

Influence of rigidity on the vibration behaviour of the guideway
The amplitude of a low-attenuation system depends on the ratio of excitation frequency to natural frequency. Higher rigidity increases the natural frequency and reduces static deflection. In machine tools a high natural frequency is targeted so that the enlarged amplitude remains as small as possible for the specified excitation force and excitation frequency.
Consequence: Use of roller guideways with a high preload class.

4.5.2 Preload classes

SCHNEEBERGER offers a total of four different preload classes for different requirements in the region of 0 - 13% of the dynamic loading capacity C. The tolerance of the preload classes is ± 3 % of C. The values in the following table can be found in the SCHNEEBERGER MONORAIL and AMS product catalogue.

Preload classes

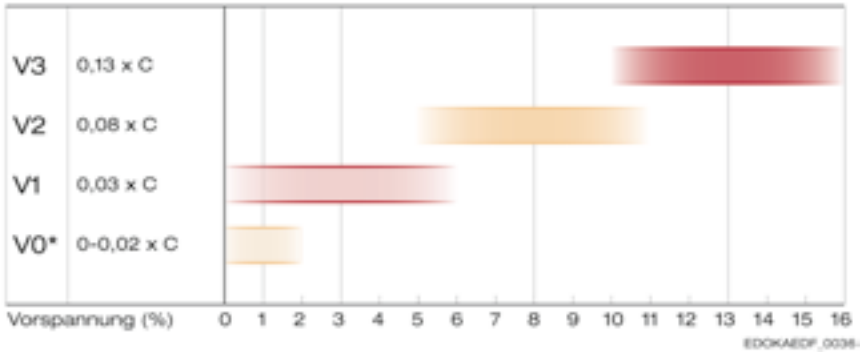

Note: * V0 only obtainable for BM guideways.

4.5.3 Areas of application

The SCHNEEBERGER MONORAIL guideways in the MONORAIL MR with roller series are available in the three preload classes V1, V2 and V3 with low, medium and high preload.
The preload class V0 is also available for MONORAIL BM with ball. For this class the preload can vary between very low preload and low backlash.
The following table sets out the typical areas of application:

Representations of profile rails

Preload class: V0

Operating conditions:
- Very low-friction guideways for even loading
- Minimal vibrations

Examples of use:
- Manual axes
- Small axes and table systems for: electronics/cleanroom/medical technology
- Secondary axes
- Linear motor axes

Preload class: V1

Operating conditions:
- Low-friction guideways for even loading
- Minimal vibrations

Examples of use:
- Handling axes
- Robotics
- Measuring systems
- Laboratory facilities
- Auxiliary and secondary axes

Preload class: V2

Operating conditions:
- High rigidity
- Medium alternating loads and vibrations

Examples of use:
- Machine tools with light cutting forces
- Grinding machines
- Machines for woodworking
- Water jet systems
- Laser cutting systems
- Eroding machines

Preload class: V3

Operating conditions:
- Maximum rigidity
- High shock loads and vibrations
- Greatly changing, high loads and moments

Examples of use:
- Machine tools with high cutting forces
- Press machines
- Milling centres
- Lathes
- Drilling machines

Effectiveness of the preload

With external loads, which are smaller than 3 times the preload force, the preload is retained under load. This means the system has a high level of rigidity. If the external force exceeds the value of the preload, the rigidity decreases. That is why it is important to ensure in the design that you remain in the field of effective preload force if there is a requirement for higher rigidity.

4.6.1 Accuracy classes

SCHNEEBERGER offers a total of four different accuracy classes for its MONORAIL guideways. They allow the user to make an accurate, application-specific selection of the guideways in line with design requirements.

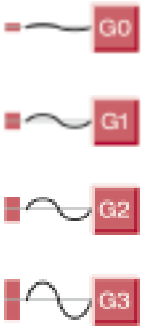

Extremely accurate

Very accurate

Accurate

Standard

The accuracy classes determine both the tolerances of the reference sizes of the carriages to the guide rail, see the following image and Section 4.6.2 - Accuracy - Dimensional tolerances, and running accuracy of carriages on guide rails in accordance with Section 1.6.3 - Accuracy - running accuracy.

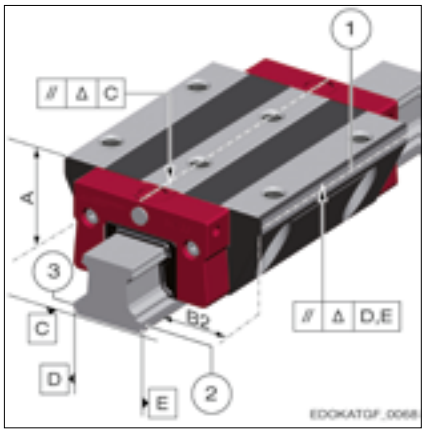

Tolerances of reference measurements for carriages to the guide rail

1 Locating side of carriage
2 Locating side of guide rail
3 Label side of guide rail

A System height
B2 Spacing between locating side of carriage an locating side of guide rail

Fields of application

Accuracy class:
– Extremely accurate
Examples of use:
- Measuring machines,
– Dressing units

Accuracy class:
– Very accurate
Examples of use:
– Measuring machines,
– Dressing units,
– CNC machines,
– CNC machining centres

Accuracy class:
– Accurate
Examples of use:
– CNC machines,
– CNC machining centres,
– Handling, robotics, secondary axes

Accuracy class:
– Standard
Examples of use:
– Handling, robotics, secondary axes

4.6.2 Dimensional tolerances

System dimensions A and B2

MONORAIL carriages and guide rails are manufactured independently of each other with extreme precision, and are therefore completely interchangeable. This means that any carriage can be used on any rail of the same size without any influence on the preload level because the preload is determined by the rolling elements of the carriage. For dimensional differences between any carriages on any rail, the values from column "A/B2" of the following table are applicable.

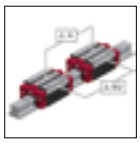
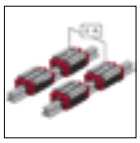

Accuracy class	A / B2	ΔA / ΔB2	ΔA Standard
G0	± 5 µm	3 µm	10 µm
G1	± 10 µm	5 µm	20 µm
G2	± 20 µm	7 µm	40 µm
G3	± 50 µm	25 µm	60 µm

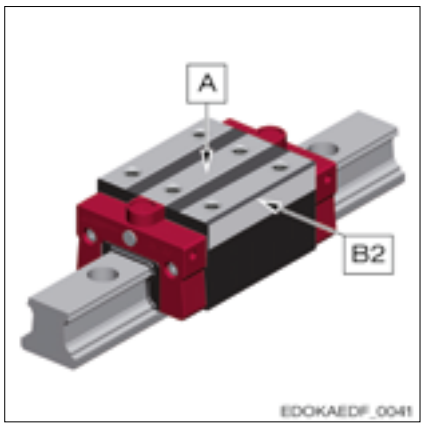

Tolerances in dimensions for any carriages and any guide rails:
– A/B2

Measuring position:
– Measured in the middle of the carriage and any guide rail position
– Values only valid for rail lengths up to 1m

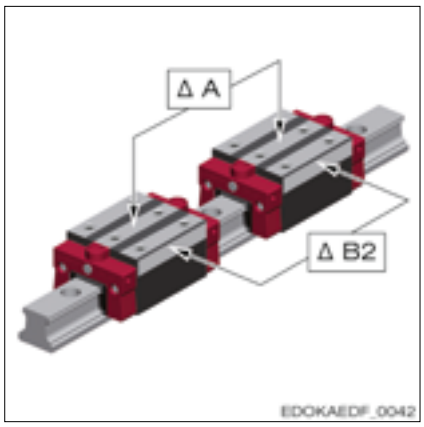

Maximum dimensional difference between the carriages on a guide rail:
– ΔA/ΔB2

Measuring position:
– Measured in the middle of the carriage and in each case the same guide rail position
– The values are doubled for ball products and individually delivered products

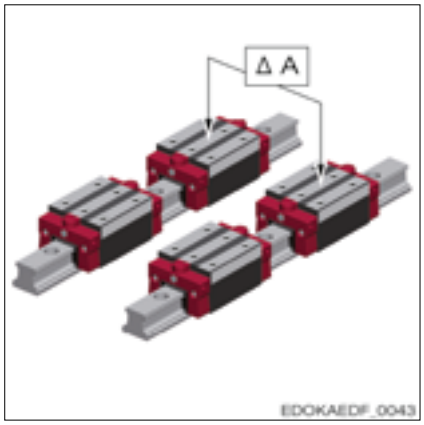

Maximum dimensions difference in carriages for two or more parallel guide rails, standard:
– ΔA standard

Measuring position:
– Measured in the middle of the carriage and in each case the same guide rail position

Matched carriages
All carriages in a set are matched to a production measurement standard and reground on their top and lateral locating surface. Then the main dimensions A and B2 are measured on a master rail to then match the carriages to one another. The carriage match can be supplied in two qualities.

Matching carriage	Maximum dimensional difference of all carriages, which belong to a match
Implementation	ΔA / ΔB2
SLWGP0	3 µm
SLWGP1	5 µm

Matched guide rails
For "matched guide rails", suitable guide rails with similar running characteristics are searched for from the existing data. The criterion for the selection process is the maximum difference whilst running over the length of the guide rail, the so-called matching tolerance.

The margin of all running protocols is within this tolerance for matched guide rails. The guide rail match can be supplied in four qualities.

Guide rail match	Matching tolerance
Implementation	
SLSGP0	5 µm
SLSGP1	10 µm
SLSGP2	15 µm
SLSGP3	20 µm

Limited tolerance for ΔA

Limited tolerance for ΔA with carriages, which are assembled close to one another on the same guide rail or on adjacent guide rails. With a very rigid connecting structure to prevent reductions in service life the following applies:
when Lb < L then ΔA ≤ 5 µm

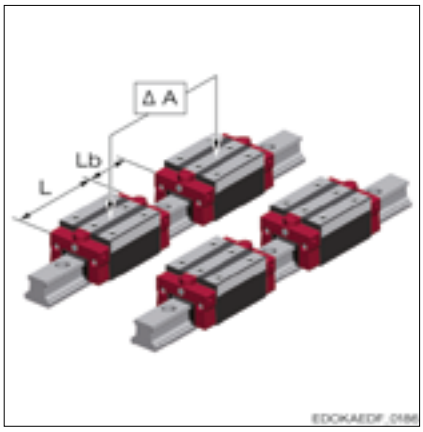

Limited tolerance for carriages, which are built close to one another on one guide rail

L Carriage length
Lb Spacing between two carriages
ΔA Dimensional deviation in system height

Dimensions of guide rails and carriages

Rail width B1

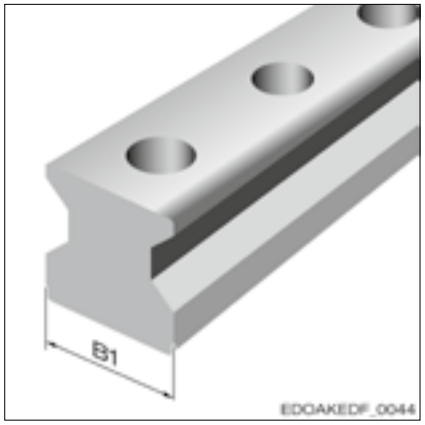

Tolerances:
– Standard; ± 0.05 mm

Rail height J1

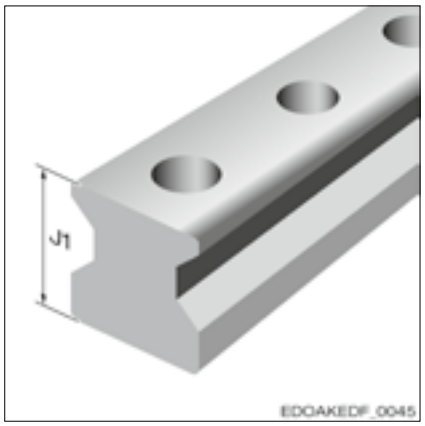

Tolerances:
– Standard/MAC/BAC; ± 0.05 mm

Carriage width B

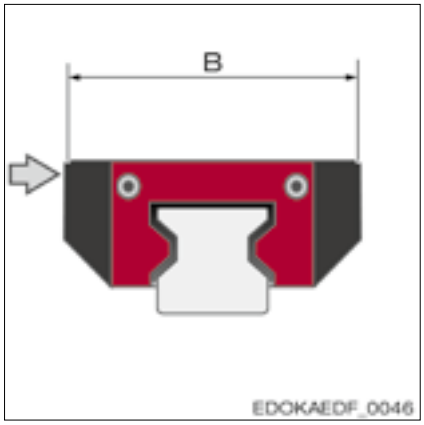

Tolerances:
– Standard locating face; MR 0/-0.3 mm; BM 0/-0.4 mm

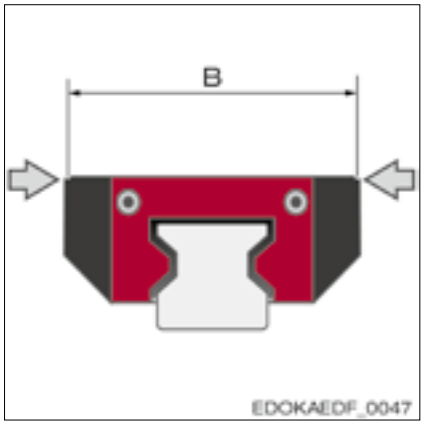

Tolerances:
– Double locating face; MR -0.35/-0.25 mm; BM -0.35/-0.25 mm

4.6.3 Running accuracy

The running accuracy describes the vertical and horizontal deviations in parallelism in the carriages whilst moving over the guide rail. It can have a linear or wave-shaped curve within the framework of tolerance (vertical XTZ and horizontal XTY). The tolerance level in relation to the carriage centre is determined from the following diagram depending on guide rail length and accuracy class.

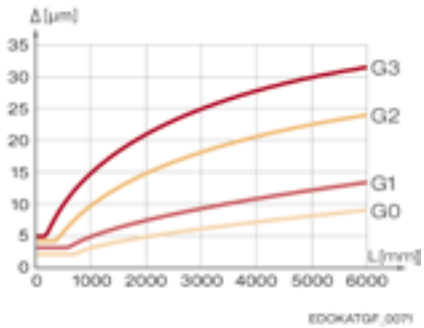

SCHNEEBERGER accuracy classes G0-G3
The guide rail length l (mm) applied against the maximum permitted deviation Δ (µm).

Reading example:
For a guide rail length L3 = 2000 mm, there is a permitted tolerance of 0.015 mm for G2.

4.7.1 Selection criteria

The installation method describes the orientation and arrangement of the individual guide rails in relation to one another in a guide system. When selecting the installation variants, different criteria must be observed. These include:

- Type of application
- Forces and moments occurring
- Accuracy requirements
- Rigidity requirements
- Operating conditions, e.g. contamination
- Type of lubrication
- Available installation space
- Assembly effort
- Consideration of changes in temperature that occur in components and the associated additional forces
- Consideration of the screw connections used on axes
- Consideration of an additional fall protection device for hanging axes

Basically the guideways should be arranged so that the forces that occur are distributed as evenly as possible over the carriages and the main load acts in the direction of tension/compression. This has the advantage that the forces are absorbed directly by the guideway and can be diverted via the fastening screws into the surrounding structure. High lateral forces in some instances cause moments acting on the guideway and can only be transmitted from additional locating surfaces in the connecting structure, which incurs additional costs.
A horizontal or vertical arrangement of the guideway should be favoured over other arrangements in terms of lubrication and protecting the guideway. In terms of installation and guideway accuracy, an arrangement with all guide rails in only one plane is recommended.

4.7.2 Installation variants

Set out below are some typical installation methods with their respective characteristics and features.
In most examples there are variants with two guide rails and in each case two carriages, as in practice these occur most frequently. The screw orientation of guide rails and carriages and the method of lateral fixing have not been included in the examples. These subjects are examined in more detail in sections 4.11 - Fastening guide rails, 4.13 - Fasting carriages and 4.14 - Configuration of the connecting structure.

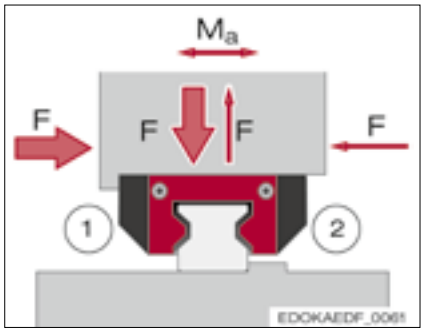

Description:

- A guide rail with one or two carriages
- Horizontal installation
- Minimal moment load carrying capacity M_a
- Manual and secondary axes with low load
- Simple alignment
- High level of lateral force absorption against locating surface (1)
- Low level of lateral force absorption against counter-locating surface (2)

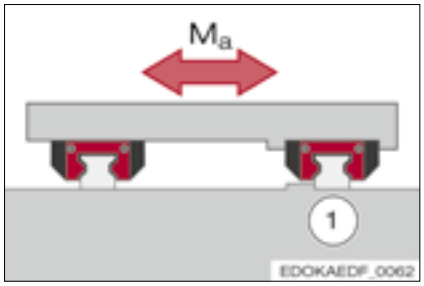

Description:
- Two guide rails each with two carriages
- Horizontal installation
- Simple installation
- High level of accuracy
- Axes of all kinds, travelling columns
- Simple alignment using reference rail (1)
- High level of moment load carrying capacity M_a

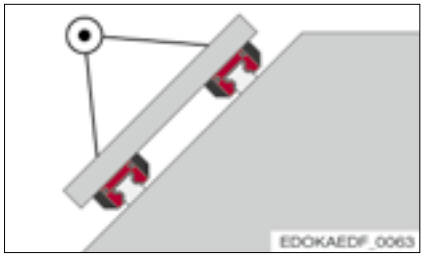

Description:
- Inclined installation e.g. inclined 45° around the longitudinal axis
- High absorption of force at the angle of inclination
- Separate lubrication for oil
- Rail susceptible to dirt (cover where applicable)
- Lathe with inclined bed
- Accumulation of dirt and coolant in the upper prism:
  - Special cover required
  - Drain hole/groove supplied

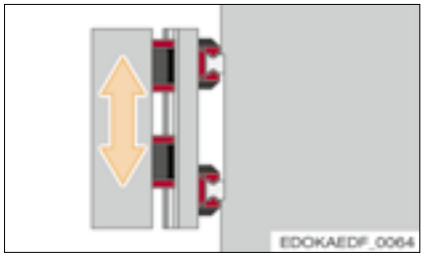

Description:
- Hanging installation, inclined by 90° (wall assembly)
- High level of absorption of horizontal force
- Separate lubrication for oil
- Rail susceptible to dirt
- Lathes, Matching Centre lateral slideways
- Accumulation of dirt and coolant in the upper prism:
  - Special cover required
  - Drain hole/groove supplied

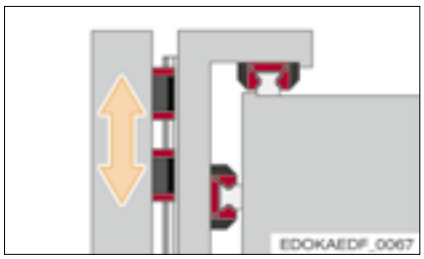

Description:
- Horizontal installation, guide rails offset by 90°
- High level of moment rigidity
- Elaborate installation
- Lateral slideways for portal machines
- Stringent requirement in respect of accuracy of location surfaces

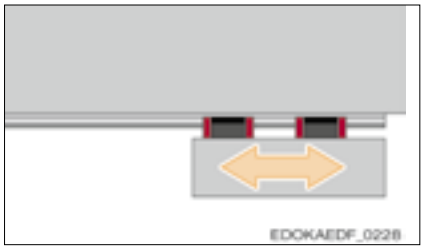

Description:
- Installation rotated by 180°, hanging axis
- Reduced rigidity due to tensile load
- Carriages are susceptible to dirt
- Increased static reliability factor a requirement
- Fall protection provided
- Recalculate screw load

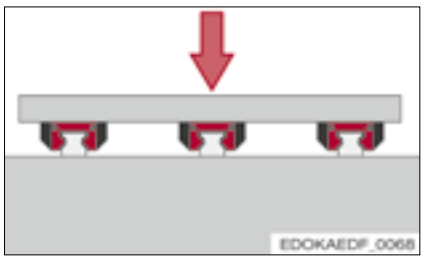

Description:
- Horizontal installation
- Multiple guide rails next to one another each with three of more carriages
- (carriage heights must be in small tolerances.)
- High level of vertical absorption of force and rigidity
- Machine tables for very high forces
- Large spacing between external rails
- Support of the plate against sagging

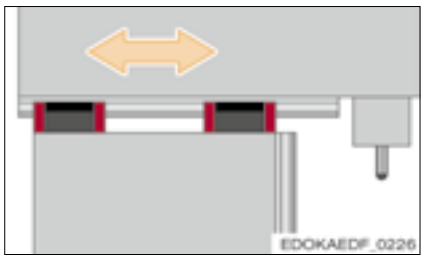

Description:
- Guide rails rotated by 180° with fixed carriages
- Horizontal installation (rail protrudes into processing room and may be damaged by swarf. Remedy: hard guide rail surface)
- For overhanging axes and supporting beams
- Horizontal milling/drilling machines, eroding machines
- Carriages susceptible to dirt

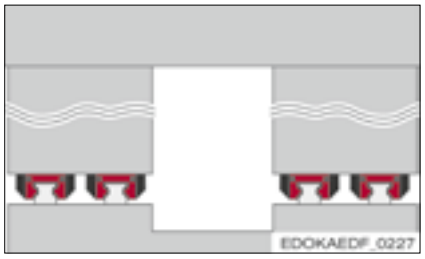

Description:
- Fit every 2 rails and carriages close to one another
- High absorption of force vertically
- Gantry machines
- Due to rigid surrounding structure, use carriages in high accuracy class and/or matched design

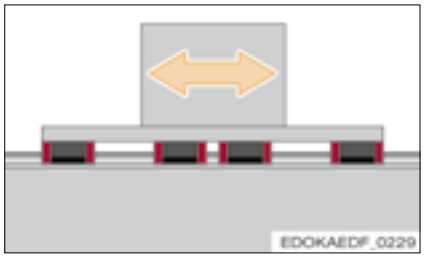

Description:
- Medium-sized carriages arranged very close under main force,
- connecting plate not rigid enough
- External carriages are additionally loaded due to sagging of plates. Remedy: rigid connecting plate
- For heavy machine tools
- Use carriages in high accuracy class and/or matched design.
- Horizontal installation

Caution

Carriages can become detached from the guide rail

➡ The carriages can become detached from the guide rail which is why an additional safety feature for the carriage must be implemented, e.g. in the form of a safety clamp around the guide rail to prevent detachment.

Appropriate design and technical safety measures need to be taken by the user, which prevent separation of carriage and guide rail in case of an error (e.g. due to loss of rolling element).
A possible variant in a design measures is a safety clamp around the guide rail. The specifications of professional associations, relevant guidelines and standards for the application in question are also to be observed.

4.8.1 Principles

The claims relating to accuracy levels, surface quality and short processing times are continuously increasing. That is why linear guideways in the modern machinery construction are increasingly determined by the permissible elastic deformation.
The following stages have been established as a result for dimensioning roller guideways:

- Determining the external forces and moments
- Distributing forces and moments on the individual carriages
- Determining the preload and deformation
- Calculating service life
- Calculating static reliability factor

The service life can be limited by material fatigue and also by damage to running surfaces due to environmental influences.
Surfaces being rolled over leads to material fatigue and thus to damage of the track and the rolling element (pitting). If the force on the rolling contact surfaces is known, the fatigue service life can be calculated in accordance with DIN IS 281 or DIN 636.
Wear to running surfaces is determined in particular by the lubrication, dirt, surface pressure and the size of relative movements of the loaded surfaces.
The calculated service life can be reduced by additional risks of failure or other aspects, which void the warranty.

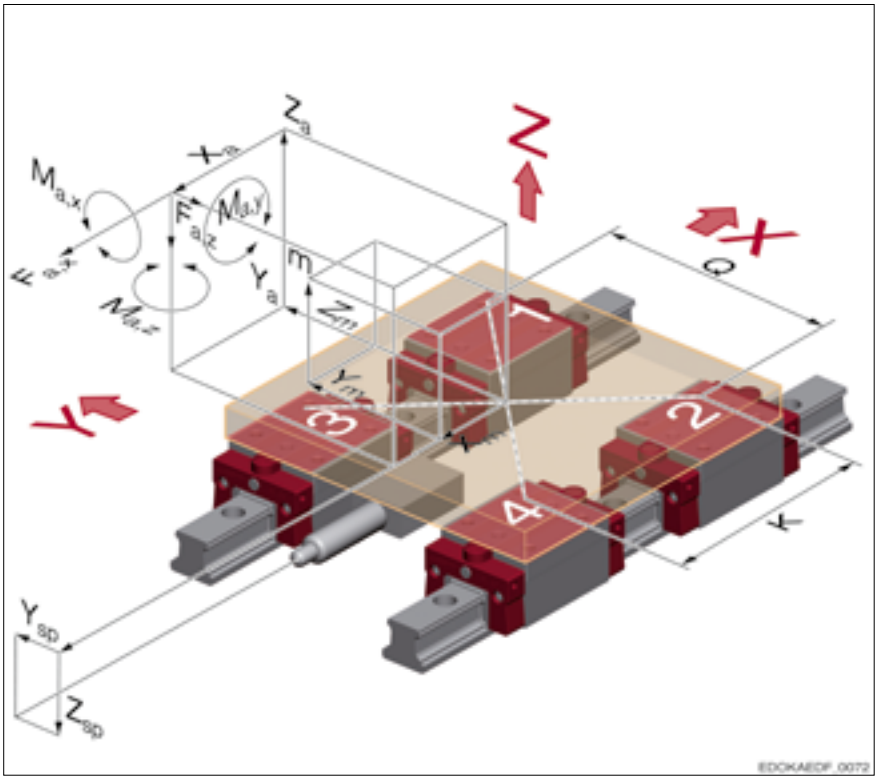

External forces and moments:

m	Mass
$F_{a,x}$	external force in the x-direction
$F_{a,z}$	external in the z-direction
Q	Lateral spacing system
K	Carriage spacing
X_a	Force application coordinates in the x-direction
Y_a	Force application coordinates in the y-direction
Z_a	Force application coordinates in the z-direction
X_m	Centre of gravity coordinates in the x-direction
Y_m	Centre of gravity coordinates in the y-direction
Z_m	Centre of gravity coordinates in the z-direction
$M_{a,x}$	external moment around the x-axis
$M_{a,y}$	external moment around the y-axis
$M_{a,z}$	external moment around the z-axis
Y_{sp}	Point of action of the force of the longitudinal drive in the y-direction
Z_{sp}	Point of action of the force of the longitudinal drive in the z-direction

How to calculate the fatigue service life is described in the following sections. Due to indeterminable factors, there is no standard wear-life calculation procedure.

4.8.2 Calculating service life

Determining the external forces and moments

The external forces acting on the guide system are determined by the force components F_{ax}, F_{ay} and F_{az} with the force application coordinates X_a, Y_a and Z_a. A mass m with the acceleration components a_x, a_y and a_z leads to loading of the guide system as a result of the inertia forces F_{mx}, F_{my} and F_{mz}, which act on the centre of gravity coordinates X_m, Y_m and Z_m.

$$F_{mx} = m \cdot -a_x$$

$$F_{my} = m \cdot -a_y$$

$$F_{mz} = m \cdot -a_z$$

EDOKAEDF_0073

F_{mx}	Inertia force in the x-direction
F_{my}	Inertia force in the y-direction
F_{mz}	Inertia force in the z-direction
m	Mass
a_x	Acceleration in the x-direction
a_y	Acceleration in the y-direction
a_z	Acceleration in the z-direction

The forces acting laterally to the longitudinal axis of the table ΣF_y, ΣF_z are absorbed directly by the guide system, and the forces in the longitudinal direction ΣF_x are transmitted by the drive.
In addition, other external moments M_{ax}, M_{ay} and M_{az} can have an influence. The external forces F_{ax}, F_{ay} and F_{az} and the inertia forces F_{mx}, F_{my} and F_{mz} also result in moments due to their respective weak points. The weak point of the longitudinal drive Y_{sp} and Z_{sp} influences the size of the moments on the guide system.

Distributing forces and moments onto the individual MONORAIL carriages

To calculate the lateral forces F_{jy} and tension-compression forces F_{jz} on each of the carriages (j = 1...n), the carriage longitudinal spacing K and carriage lateral spacing (track gauge) Q are needed. Otherwise, the design arrangement of carriage and guide rail in the axes must be taken into account.

Determining the preload and deformation

The preload class of SCHNEEBERGER MONORAIL guideways is determined by the operating conditions and the demands made on the rigidity of the machine guideway. The preload V1, V2 or V3 not only increases the rigidity, they also load the rolling contact surfaces as long as the preload is effective. For details on the various preload classes, see Section 4.5 - Preload.
The external forces acting on the MONORAIL result in displacements of the carriages. Rigidity diagrams with the structural shape and size-dependent deflection values for traction and compression load can be found in the SCHNEEBERGER MONORAIL and AMS product catalogue.

Factors influencing the calculation of service life

The factors affecting service life are the forces acting on MONORAIL carriages, the selected preload, dynamic loading capacity and the event probability.
If constant forces act over the entire travel distance, the service life is calculated with the equivalent force P. However, if varying forces are expected, the dynamic equivalent force P_j must be used.

Dynamic equivalent force P

The dynamic equivalent force Pj for each MONORAIL carriage (j = 1...n) is needed to calculate the service life. The amounts of the force components F_{jy} and F_{jz} acting on the carriages are added algebraically to the effective force F_j:

$$F_j = |F_{jY}| + |F_{jZ}|$$

EDOKAEDF_0185

F_j effective force (N)
F_{jy} effective force (N) in the y-direction
F_{jz} effective force (N) in the z-direction

In the case of applications, in which the MONORAIL carriages are subject to loads comprising both forces and moments, e.g., in the case of single carriages or systems with only one guide rail, the dynamic equivalent force P_j is determined using the following formula:

$$F_j = |F_{jy}| + |F_{jz}| + C \cdot |M_j| / M_{QL}$$

EDOKAEDF_0074

C = dynamic loading capacity (N)
F_j effective force (N)
F_{jy} effective force (N) in the y-direction
F_{jz} effective force (N) in the z-direction
M_j dynamic moment (Nm)
M_{QL} permissible dynamic longitudinal or transverse moment (Nm)

The following formula can then be used to calculate the approximate value of the dynamic equivalent force P_j, which actually acts on the rolling-contact surfaces under constant load:

$$P_j = F_{vsp} + 2 / 3 \cdot F_j$$

for $F_j \leq 3 \cdot F_{vsp}$

$$P_j = F_j$$

for $F_j > 3 \cdot F_{vsp}$

EDOKAEDF_0075

F_j effective per partial travel distance Lk (N)
F_{vsp} preload force (N)
P_j dynamic equivalent force (N)

If force P is not constant, the dynamic equivalent force P_j in the step-loading mode can be calculated for each MONORAIL carriage using the following formula (the respective force P_{jk} is constant for each partial travel distance l_k):

$$P_j = \sqrt[q]{\frac{\sum_{k=1}^{n} (P_{jk}^{\,q} \cdot l_k)}{\sum_{k=1}^{n} l_k}}$$

EDOKAEDF_0187

P_j dynamic equivalent force (N)
P_{jk} dynamic equivalent force (N) per partial travel distance l_k, k = 1...n
l_k partial travel distance (m), k = 1...n
q Exponent for the service life calculation
= 10/3 in the case of roller
= 3 in the case of ball

Dynamic loading capacity C

The loading capacity figures for roller guideways are based on the principles specified by the ISO for calculation of rolling-contact bearings (DIN ISO 281).
Dynamic loading capacity is the loading, which results in a nominal service life corresponding to a translation distance of 100,000 m (100 km) provided that the loading due to mass and direction is unchanged and the line of influence acts vertically on the rolling-contact bearing unit.

Comparison of loading capacity

Other manufacturers often indicate their loading capacities for a travel distance of 50 000 m (50 km). These values according to the JIS Standard are significantly above the values according to DIN ISO. The recalculation of the loading capacities is completed using the following formula:

$$C_{50} = 1{,}23 \cdot C_{100}$$ for roller-guideways

$$C_{50} = 1{,}26 \cdot C_{100}$$ for ball-guideways

EDOKATGF_0051

Event probability

According to DIN ISO, the loading capacities for roller-contact bearings are specified such that a value results from the service life formula which will be exceeded with a probability of 90 %. If this probability is insufficient, the service life values must be reduced by a factor a1 according to the table set out below:

Event probability (%)	90	95	96	97	98	99		
a1	1	0.62	0.53	0.44	0.33	0.21		

Service life calculation

The nominal calculated service life L_{nom} for an equivalent force P (N) and a dynamic loading capacity C (N) is:

$$L_{nom} = a_1 \cdot (C / P)^q \cdot 100km$$

EDOKATGF_0057

L_{nom} nominal service life (km)
C dynamic loading capacity
P equivalent force
a_1 service life adjustment factor
q Exponent for the service life calculation
= 10/3 in the case of roller
= 3 in the case of ball

$$L_{nom,h} = L_{nom} / (2 \cdot s \cdot n \cdot 60) = L_{nom} / (60 \cdot v_m)$$

EDOKATGF_0084

$L_{nom,h}$ nominal service life (h)
L_{nom} nominal service life (m)
v_m average speed (m/min)
s travel length (m)
n stroke frequency (min^{-1})

Note

➡ For short-stroke applications with a stroke, which is less than or equal to two times the diameter of the rolling element, the calculated service life needs to be reduced.

4.8.3 Calculating the static reliability factor S_0

The static reliability factor S_0 is the safeguard against unpermitted permanent deformations to rolling elements and tracks and is defined as the ratio of static loading capacity C_0 to static equivalent force P_0:

$$S_0 = C_0 / P_0$$

EDOKATGF_0052

S_0 static reliability factor
C_0 static loading capacity
P_0 static equivalent force

$$P_0 = |F_{0y}| + |F_{0z}| + C_0 \cdot |M_0| / M_{0QL}$$

EDOKATGF_0080

C_0 static loading capacity
F_{0y} external static forces (N)
F_{0z} external static forces (N)
P_0 static equivalent force
M_{0QL} permissible static longitudinal or transverse moment (Nm)
M_0 = static moment load (Nm)

The actual force acting on the rolling-contact surfaces must be taken into account for P_0. The governing factor for a deformation of the rolling-contact surfaces is the highest amplitude which can also occur for a very short period of time.
We recommend that the following minimum values are observed for the static reliability factor S_0 depending on requirements and operating conditions:

Operating conditions	S_0
Overhead hanging arrangements, Application with high risk potential	≥ 12
High dynamic stress, high shock loads and vibrations	8 - 12
Normal design of machinery and plant, not all load parameters fully known medium alternating loads and vibrations	5 - 8
All load data fully known, even load and low vibrations	3 - 5

4.8.4 Calculation program for the dimensioning MONORAIL

Manual calculating the service life, the reliability factor and, in particular, the displacement under a combined load is very complicated and can only be carried out for simple applications. For this reason, as a service SCHNEEBERGER offers to carry out these calculations with the help of a computer program.

Objective and purpose of the MONORAIL calculation program

The computer-assisted calculation program for designing MONORAILs is used to determine:

- The required MONORAIL size
- The optimum preload
- Static reliability factor
- Nominal service life
- Deflection of the working point under the effect of a load for a given MONORAIL system.

Taken into consideration to do this are the real, non-linear rigidities of the individual MONORAIL carriages and the interaction of the carriages with one another, which are produced by the differing rigidities under tensile, compressive and lateral loads. Additional deformations as a result of thermal expansion and elastic deformation of the machine construction are not taken into consideration.

Required data

By way of example for the design, full information is required, as represented on the following machine drawing complete with data sheet:

- Guideway geometry with the number of carriages and guide rails, carriage spacings longitudinally and laterally
- Position of the axes in space and distances between them (distances between the reference points of adjacent axes)
- Masses of all machine axes and workpieces being calculated
- Location of the mass centres of gravity
- Location of the drive elements in relation to the corresponding axis reference point
- Location of the load point (point of attack of force and moment)
- Maximum travel distances (stroke) of all axes being calculated
- Maximum speed and acceleration of the axes

Additionally, in the case of differing load scenarios:

- Collective load with speed, acceleration, travel distance and percentage proportion of time as well as magnitude and direction of the forces and moments applied at the working point according to the corresponding load scenario.

All geometrical dimensions are related to the corresponding axis centre (refer to drawing). The designation of the axes in the Cartesian coordinates' system can be selected as required.
For a large number of typical machines and designs, SCHNEEBERGER can provide machine sketches and data sheets. For further information, please contact your SCHNEEBERGER representative.

4.8.5 Sample data sheet for an x-/y-table

Masses								
m_x =		kg	m_y =		kg	m_w =		kg

Dimensions								
S1 =		mm	S2 =		mm	S3 =		mm
S4 =		mm	S5 =		mm	S6 =		mm
S7 =		mm	S8 =		mm	S9 =		mm
K1 =		mm	K5 =		mm			
Q2 =		mm	Q4 =		mm			
A2 =		mm	A3 =		mm			
A4 =		mm	A6 =		mm			
L4 =		mm	L5 =		mm	L6 =		mm
B1 =		mm	B2 =		mm	B3 =		mm

Stroke (max.)					
s_x =		mm	s_y =		mm

Acceleration (max.)					
a_x =		m/s^2	a_y =		m/s^2

Combined force: Forces and moments

No.	Cycle	F_x	F_y	F_z	M_x	M_y	M_z
		N	N	N	Nm	Nm	Nm
1							
2							
3							
4							
5							

Combined force: Proportions of distance / time

	X axis			Y axis		
No.	Speed	Proportion of time	Travel distance	Speed	Proportion of time	Travel distance
	v (m/min)	t (%)	s (mm)	v (m/min)	t (%)	s (mm)
1						
2						
3						
4						
5						

4.8.6 Sample machine drawing for an x-/y-table

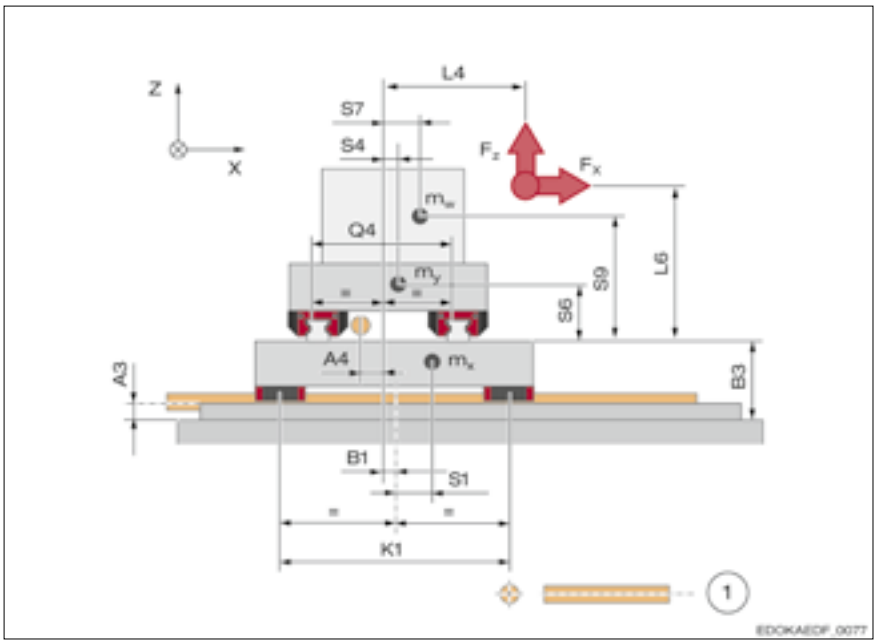

Example of a machine drawing for an x-/y-table
1 Ballscrew

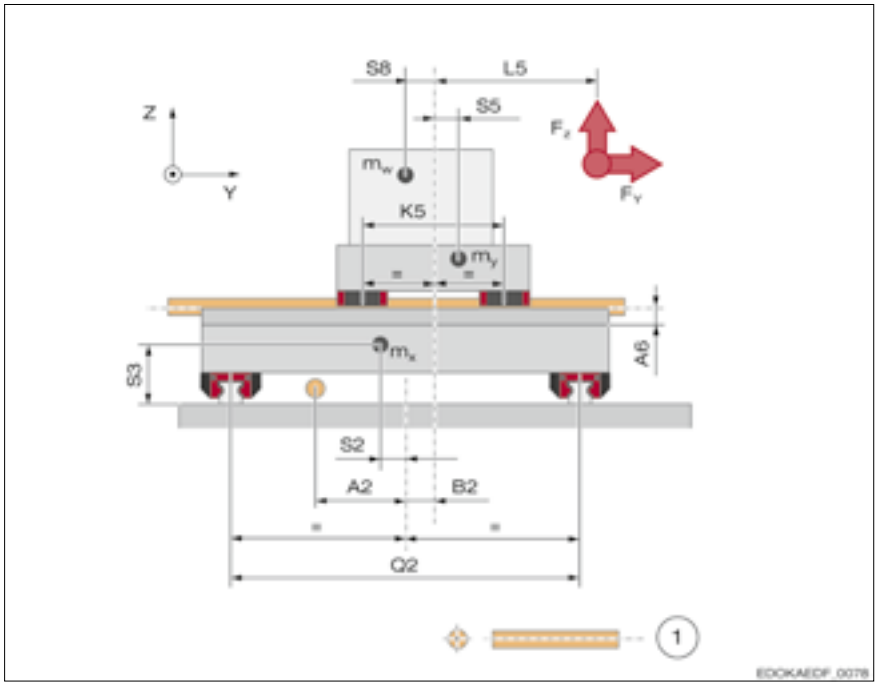

Example of a machine drawing for an X-/Y-table
1 Ballscrew

4.9.1 Methods of attachment

The MONORAIL guide rails can be attached in two ways. Standard rails (N) and guide rails for cover strips (C) have continuous fixing holes with countersinking for fastening from above. In addition there are also guide rails with tapped fixing holes on the underside (U), which can be screwed through the machine table from below.
The following overview shows the advantages and disadvantages of the two methods of attachment.

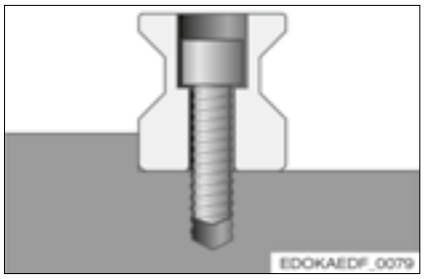

Attaching from above (N, ND, C, CD)

Advantages:
- Good accessibility

Disadvantages:
- Rail fixing holes must be closed with plugs or cover strips to protect the wipers
- Projecting edges due to closures: Wiper wear, Contamination

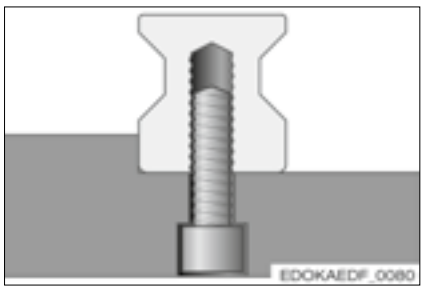

Attaching from below (NU, NUD)

Advantages:
- No closures required for guide rail fixing holes
- Rail surface without projecting edges

Disadvantages:
- Limited accessibility
- Lower tensioning force due to long screws

4.9.2 Rail options

Special fixing hole pitches L4

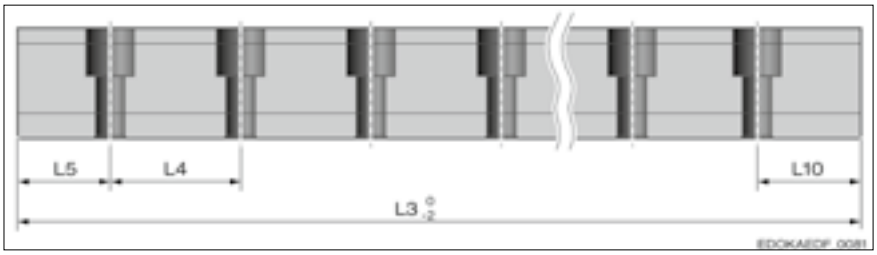

Fixing hole pitches:

L5	Starting fixing hole spacing	L3	Rail length
L4	fixing hole pitch	L10	End fixing hole spacing

Double or half fixing hole pitch L4

MONORAIL MR guide rails are supplied with double fixing hole spacing L4 on request. This is not a standard product (order code NX). Availability on request.
It is important to note with this that rigidity and running accuracy is reduced in this scenario.
Guide rails with half fixing hole pitch (corresponds to MR Standard L4) can also be supplied for MONORAIL BM guide rails to increase rigidity and to improve running accuracy. This is not a standard product (order code NX). Availability on request.

Other special fixing hole pitches

Customer-specific fixing hole pitches or fixing hole pitches, which change over the guide rail length, e.g. at the butt joint with multi-part guide rails, can be supplied on request.

Additional locating fixing holes and threads

Guide rails with additional fixing holes, e.g. for locating pins or with additional tapped holes can be supplied as an option.
Availability on request.

Guide rail additional fixing holes upper side

On the guide rail upper side additional fixing holes can be incorporated according to customer-specific specifications e.g. for locating pins, or through fixing holes, for carriage installation for instance. Availability on request.

Rail end processing

The guide rail ends are processed after separating the guide rails.
Standard design:

- Phase for transferring carriages.
- Protection against damage.
- Clean support for the cover strip in the case of rails with cover strips.

Standard

4.9.3 Closures for fixing holes

The following closures can be supplied for guide rail holes.
A comparison of the individual component types with their advantages and disadvantages can be found in Section 4.3 - Guide rail types.
For available sizes, types and order details, see SCHNEEBERGER MONORAIL and AMS product catalogue and information on installation, see SCHNEEBERGER Installation instructions for steel and brass plugs.

Plastic plugs

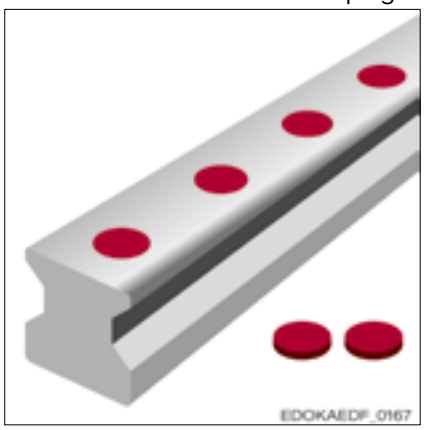

Features:

- Inexpensive
- Easy to install and uninstall
- For protected axes and clean working environment, e.g. for handling applications
- Order code for roller products: MRK
- Order code for ball products: BRK
- Cannot be re-used

Brass plugs

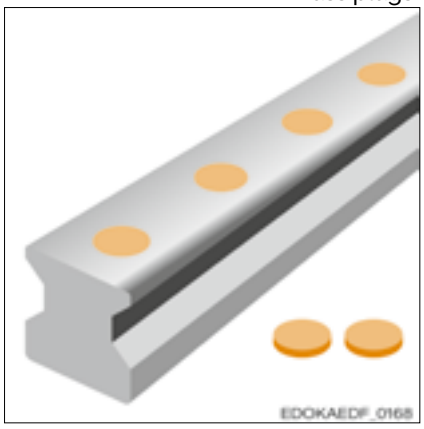

Features:

- Inexpensive
- Smooth and gap-free surface
- Excellent wiper function
- For increased thermal and mechanical stresses
- Liquid-tight
- Assembly with hydraulic installation tool necessary
- Not reusable
- Order code for roller products: MRS
- Order code for ball products: BRS

Steel plugs

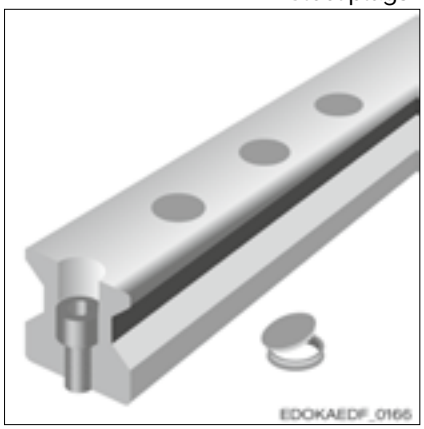

Features:

- Smooth guide rail surface
- Good wiper function
- For high mechanical and thermal stresses, e.g. outdoors Swarf area
- Simple assembly with hydraulic installation tool
- Expensive
- Not reusable
- Order code for roller products: MRZ

Cover strip

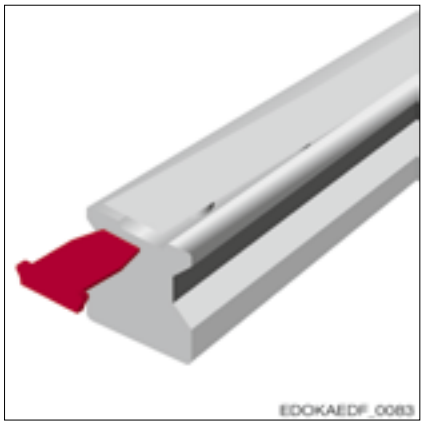

Features:

- Smooth guide rail surface with only one projecting edge in the longitudinal direction
- Good wiper function
- Minimal installation overhead using installation tool
- Only one closure for the entire guide rail
- Can be reused on multiple occasions and easy to disassemble
- Free space needed behind the guide rail for installation
- Securing the cover strip ends by means of end pieces (EST) or securing bands (BSC)
- Order code for roller products: MAC
- Order code for ball products: BAC

4.9.4 Tolerances for guide rail length and guide rail fixing holes for N-, ND-, NU-, NUD-, C- und CD-type guide rails

The longitudinal tolerance for single- and multi-part guide rails is L3 = -/-2 mm
The position tolerance of the fixing holes for single- and multi-part guide rails is:

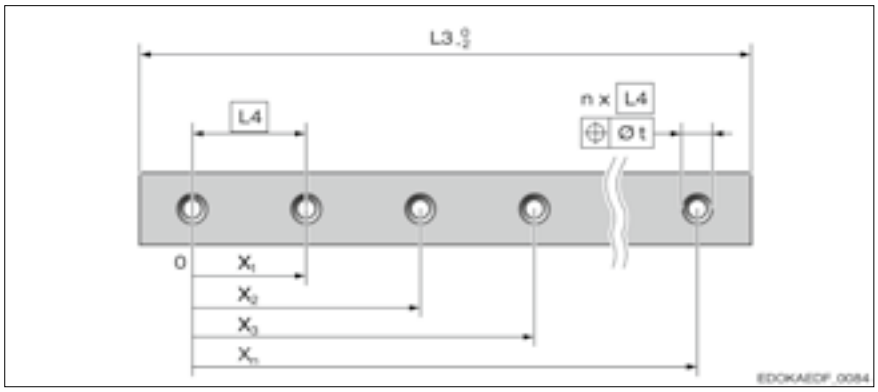

Diagram of fixing hole spacing L4:
L4 Fixing hole pitch
L3 Rail length

Position tolerance t (mm)								
Rail	x_n ≤ 1000 mm	x_n > 1000 mm						
inductively hardened	0.4	0.4						
fully hardened	0.6	0.8						

4.9.5 Permissible screw tightening torques

See the table below for the maximum tightening torques for fastening screws DIN 912 / ISO 4762. This is based on a friction coefficient as delivered of μ = 0.125.

Caution

Component damage due to screws not tightened using the correct torque

- The recommendations of the screw suppliers must be followed and are always binding.
- Screws with low head DIN 6912 are to be tightened according to strength grade 8.8
- 8.8-grade screws should be used for AMS guide rails.

Tightening torques for fastening screws ISO 4762:

Maximum tightening torque (Nm)								
Screw	**M4**	**M5**	**M6**	**M8**	**M12**	**M14**	**M16**	**M24**
Size	(15)	(20)	(25)	(30, 35)	(45)	(55)	(65)	(100)
Strength grade 8.8	3	6	10	24	83	130	200	700
12.9	5	10	16	40	95	166	265	1100

To increase breakage resistance in the event of a collision of moving axes, where possible screws of strength grade 12.9 should be used for linear guideways in accordance with ISO 898-1. Basically, however, screws with strength classes from 8.8 to 12.9 can be used.
A more uniform preload force is obtained when grease containing MoS_2 is applied to the carriage fastening screws, which are then tightened with a torque wrench. This results in a marked improvement of running accuracy.

Caution

Component damage due to screws not tightened using the correct torque

➡ By using greases, especially greases containing MoS_2, the coefficient of friction μ can drop to half. The torques must be reduced accordingly.

The fastening screws can be secured if losses in tension are expected.

4.9.6 Permissible lateral force without locating surface

The guide values for the maximum permissible side forces can be obtained from the table below for cases where no locating surfaces are provided.
The F_{Side_max} values depend on the dynamic load carrying capacity C, the type of carriage fastening and the strength grade of the screws.

Max. side force F_{Side_max} (N) on the guide rail without locating surfaces

based on screw connections with screws of strength grade 8.8. The values in the table indicate the max. side force that is exerted by one carriage on the rail and are valid for a standard fixing hole spacing L4. The values increase accordingly with the use of two or more carriages.

Maximum lateral force $F_{Lateral_max}$ (N)								
	MONORAIL MR		MONORAIL BM					
Carriage type	A, C, E	B, D	A, C, E, F	B, D, G				
Size								
15			280	320				
20			480	550				
25	1400	1600	710	810				
30	2800	3200	1400	1600				
35	2800	3200	1400	1600				
45	6900	7900	3400	3900				
55	9600	10900						
65	13200	15100						
100	31500	36000						

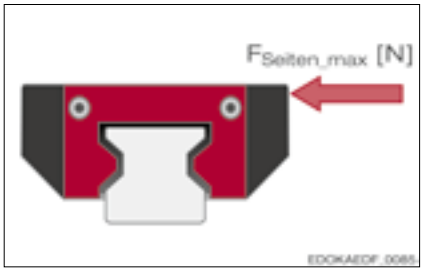

Maximum side force F_{Side_max}(N), which acts on one carriage

The maximum side forces listed only apply for ideal rigid connecting surfaces in the connecting structure and screw fastenings made of steel or cast steel. In the case of unstable connecting surfaces the screw loads in part increase enormously and can result in screw connections coming undone. For screw fastenings made of aluminium, the maximum permissible side forces should be reduced in accordance with VDI 2230.

4.9.7 Permissible tensile forces and transverse torques

The maximum load of a profile rail guideway is not only determined by the static load carrying capacities C_0 and the static moments M_0 of the rolling contacts, but also by the screw connections to the carriages and rails. In this a maximum load limit is determined by the screw connection of the guide rail.

Maximum tensile forces $F_{Tension_max}$ and transverse torques M_{Q_max} of profile rail guideways

based on screw connections with screws of strength grade 8.8. The values in the table indicate the maximum permissible tensile forces and transverse torques that are exerted by one carriage on the rail and are valid for a standard fixing hole spacing L4.

Maximum tensile forces $F_{Tension_max}$ (N) and transverse torques M_{Q_max} (Nm)

	MONORAIL MR				MONORAIL BM			
Carriage type	A, C, E		B, D		A, C, E, F		B, D, G	
	$F_{Tension_max}$ (N)	M_{Q_max} (Nm)	$F_{Tension_max}$ (N)	M_{Q_max} (Nm)	$F_{Tension_max}$ (N)	M_{Q_max} (Nm)	$F_{Tension_max}$ (N)	M_{Q_max} (Nm)
Size								
15					3700	26	4200	30
20					6400	60	7300	68
25	18800	200	21500	230	9400	100	10800	120
30	37000	490	42300	560	18500	240	21100	280
35	36900	590	42200	680	18500	300	21100	340
45	91700	1900	104800	2200	45900	970	52400	1100
55	127400	3200	145600	3600				
65	176400	5200	201700	6000				
100	419400	19700	479300	22500				

When these values are exceeded, always check the screw connections. For this purpose you may need to loosen the screw connections.

The maximum tensile forces and torsional moments listed only apply for ideal rigid connecting surfaces in the connecting structure and screw fastenings made of steel or cast steel. In the case of unstable connecting surfaces the screw loads in part increase enormously and can result in screw connections coming undone. For screw fastenings made of aluminium, the maximum tensile forces and transverse torques should be reduced in accordance with VDI 2230.

4.9.8 Accuracyinfluencing factors

The accuracy of the guide rail fastening is influenced by a series of factors:

Accuracy of the connecting structure	Accuracy of the surfaces is translated to the guide rail: Reduction in service life in case of inadequate quality
Straightness of the guide rail	No kinks, in accordance with the SCHNEEBERGER specification
Fixing hole spacing of the fixing holes	Screws cannot be installed in the machine bed but sit in the guide rail fixing hole
Installation method with/without lateral locating surfaces	where applicable, limit straightness
Tightening torque	make sure that the screws are tightened evenly
Use of flat washers	make user that they are not located on the fixing hole and the installation space is not restricted for plugs
Greasing state of the machine bed, guide rail and screws	clean all
Installation method (in one stage tighten the screws or prealign with reduced tightening torque)	See MONORAIL and AMS installation instructions
Tightening sequence for the fixing holes	See MONORAIL and AMS installation instructions
Temperature difference between guide rail and machine bed during installation (thermal longitudinal expansion)	ensure that the guide rails have the same temperature during installation as the machine bed

Detailed information about the individual points can be found in:

- SCHNEEBERGER MONORAIL and AMS product catalogue and installation instructions
- Section 1.6 - Accuracy
- Section 1.7 - Straightness and guide rail curvature
- Section 4.7 - Straightness

4.10.1 Combined guide rails and butt joints

The length L3 of a single-part SCHNEEBERGER MONORAIL guideway is limited to max. 6 m by the production facility. The maximum lengths can be taken from the respective product descriptions. Longer lengths can be made by joining two or more guide rails. The guide rail sections are fixed to create a gap-free fully loadable butt joint.

4.10.2 Installation and markings

Multi-part guide rails are marked on the butt joints with a digit and in the case of GP versions are also given a set number at the start of the guide rail.

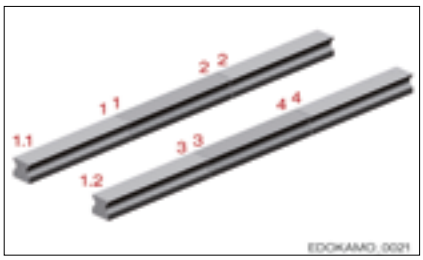

Numbering of the guide rail joints and set numbers
The notation 1.1 only refers to the GP design.

Install the guide rails in such a manner, that the butt joint numbers match. The guide rail with the set number index 1, or with the butt joint number 1 is designated as the reference rail.
When installing multi-part guide rail tracks without a locating surface in the machine bed, then align the guide rail butt joints using a fixing bridge.

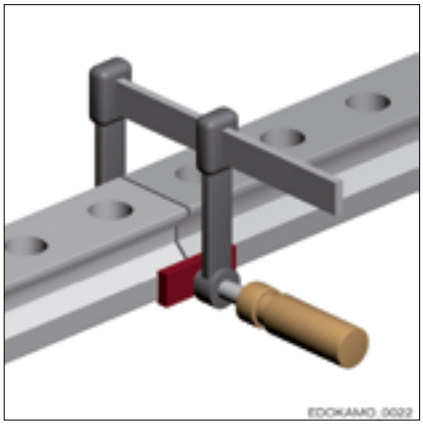

Installation using a fixing bridge

During the installation with locating surfaces on the machine side, always lay the guide rails with their locating side against the locating surface. In both cases pay attention, that the guide rails are joined together without any gaps.
For replacement parts, multi-part guide rails can only be replaced as complete units. A subsequent order of individual, customer-specific parts is not possible.
Interchangeability of individual guide rail parts for types N, NU, NUD, C and CD is only allowed with MONORAIL RSR and BSR, and with MONORAIL AMS 3L.

4.11.1 Methods of attachment

The MONORAIL carriages, depending on the type and size have fixing holes with positions in accordance with DIN 645 for fastening to the connecting structure. For types A and B, they are designed as combination tapped fixing holes, and for compact types C, D, E, F and G as blind fixing holes. To achieve maximum carriage rigidity, it is recommended that all fixing holes are used. See Section 3.

Fastening from above

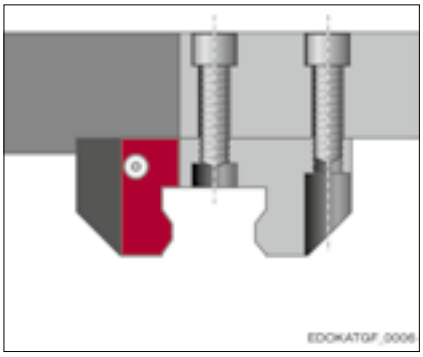

Attaching using the tapped hole

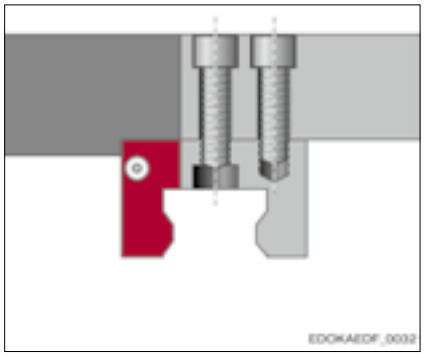

Attaching using the tapped hole

All carriages can be fastened from above using the tapped fixing holes. This is the preferred method. It results in a stronger joint because the thread permits the use of a larger screw diameter.
When using the middle fixing holes, remove the plastic protective plugs, if present. Please note the length of the middle fastening screws to avoid damaging the guide rail.

Fastening from below

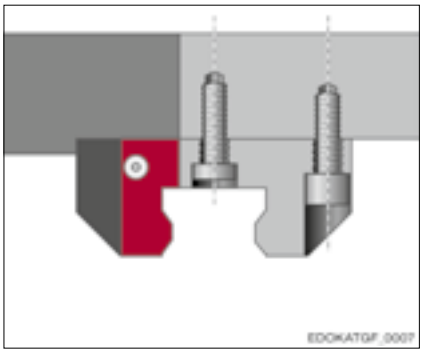

Attaching using the tapped hole

Carriage types A and B can also be fastened from below by using the tapped fixing holes as continuous fixing holes with the corresponding smaller screw diameter. Where this is the case, screws with low screw heads in accordance with DIN 6912 have to be used in the middle fixing holes. If the two middle mounting holes are being used, the plastic protective plugs must be removed if present.

4.11.2 Lateral locating surfaces

Standard datum edge
As standard the carriages have a ground locating surface on one side. This is defined by the B2 dimension.

Double datum edge
Both sides of the carriage have a ground surface. The main stop locating side is identified in the case of the MR carriages by an A on the side surface. In the case of BM carriages the main locating surface is identified by means of a longitudinal notch. The main locating surface is defined by the B2 dimension. The second locating surface is dimensioned in relation to the main locating surface. In relation to the B2 dimension the two locating surfaces are not symmetrically in the middle of the carriage.

4.11.3 Permissible lateral force without locating surface

The guide values for the maximum permissible side forces can be obtained from the table below for cases where no locating surfaces are provided.
The F_{Side_max} values depend on the dynamic load carrying capacity C, the type of carriage fastening and the strength grade of the screws.

Maximum lateral force per carriage without locating surfaces
depending on size and number of fastening screws DIN 912/ISO 4762:

Maximum lateral force $F_{Lateral_max}$ (N)								
Screw	M4	M4	M5	M5	M6	M6	M8	M8
(Size)	(15)	(15)	(15, 20)	(15, 20)	(20, 25)	(20, 25)	(25, 30, 35)	(25, 30, 35)
Number of screws	4 S	6 S	4 S	6 S	4 S	6 S	4 S	6 S
Strength grade 8.8	1250	1900	2100	3150	2950	4450	5400	8100
12.9	2150	3250	3550	5300	5000	7500	9200	13800

Screw	M10	M10	M12	M12	M14	M14	M16	M16
(Size)	(30, 35, 45)	(30, 35, 45)	(45, 55)	(45, 55)	(55, 65)	(55, 65)	(65)	(65)
Number of screws	4 S	6 S	4 S	6 S	4 S	6 S	4 S	6 S
Strength grade 8.8	8600	13000	12600	19000	17300	26000	23900	35800
12.9	14600	21900	21300	32000	29300	44000	40300	60400

Screw	M16	M16	M20	M20				
(Size)	(100)	(100)	(100)	(100)				
Number of screws	6 S	9 S	6 S	9 S				
Strength grade 8.8	35800	53700	55100	82700				
12.9	60400	90600	92000	138100				

4.11.4 Influence of the number fastening screws on rigidity

The diagram illustrates the correlation between guideway rigidity and the number and quality of the fastening screws per carriage. Particularly under tensile load, the elastic deformation increases significantly when reducing the number of screws from 6 to 4 screws.

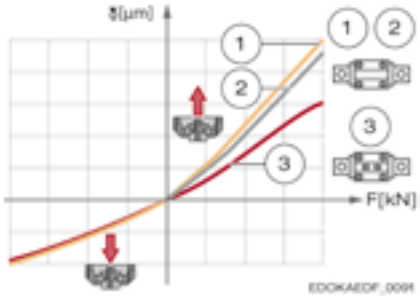

1 4 screws, quality grade 8.8
2 4 screws, quality grade 12.9
3 6 screws, quality grade 8.8

δ Deformation under force F
F Force

Influence of carriage fastening on rigidity based on the example of a 4-row ball guideway with O-geometry. The force F (kN) under tension and pressure is applied against the deformation δ (µm).

4.11.5 Permissible screw tightening torques

See the table below for the maximum tightening torques for fastening screws in accordance with ISO 4762. This is based on a friction coefficient as delivered of µ = 0.125.

Caution

Component damage due to screws not tightened using the correct torque

- ➡ The recommendations of the screw suppliers must be followed and are always binding.
- ➡ Screws with low head DIN 6912 are to be tightened according to strength grade 8.8

Tightening torques for fastening screws ISO 4762:

To increase breakage resistance in the event of a collision of moving axes, where possible screws of strength grade 12.9 should be used for linear guideways in accordance with ISO 898-1. Basically, however, screws with strength classes from 8.8 to 12.9 can be used.

Maximum tightening torque (Nm)								
Screw	**M4**	**M5**	**M6**	**M8**	**M10**	**M12**	**M14**	**M16**
(Size)	(15)	(15, 20)	(20, 25)	(25-35)	(30-45)	(45, 55)	(55)	(65)
Strength grade 8.8	3	6	10	25	49	83	130	200
12.9	5	10	16	40	81	95	166	265

Screw	**M20**
(Size)	(100)
Strength grade 8.8	410
12.9	680

4.11.4 Permissible screw tightening torques

See the table below for the maximum tightening torques for fastening screws in accordance with ISO 4762. This is based on a friction coefficient as delivered of µ = 0.125.

Caution

Component damage due to screws not tightened using the correct torque

- The recommendations of the screw suppliers must be followed and are always binding.
- Screws with low head DIN 6912 are to be tightened according to strength grade 8.8

Secure the screws if any loss of tension is expected.

4.11.6 Minimum screw depth

The required screw length for the carriage fastening can be determined based on the thickness of the carriage or of the machine slide and the minimum screw depth e.g. in accordance with guideline VDI 2230. For carriage dimensions, see SCHNEEBERGER MONORAIL and AMS product catalogue.

4.12.1 Lateral locating surfaces

For simple installation and precise alignment of the SCHNEEBERGER MONORAIL guideway, the location surfaces of the guide rails and carriages should be fitted to lateral locating surfaces. As a result it will be possible to transmit higher lateral forces. See permitted lateral force without locating surfaces, Section 4.11 - Fastening guide rail and 4.13 - Fastening carriages.
Observance of the following height specifications for the locating surfaces guarantees secure absorption of force and sufficient free space for the carriages. The carriages and guide rails have a chamfer on the edges of the locating surfaces which means that the connecting structure can be designed without a relief groove. The specified corner radiuses are maximum values, which ensure that carriages and guide rails correctly lie adjacent to the location surfaces.

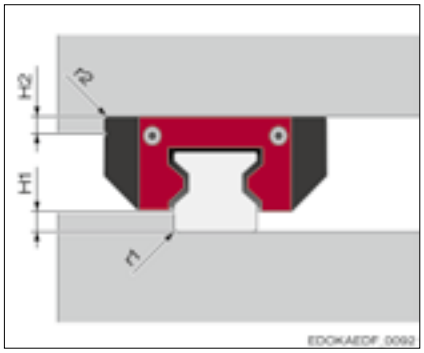

r1 Corner radius of guide rail edge
r2 Corner radius of carriage edge
H1 Locating height of guide rail
H2 Locating height of carriage

Dimensions of the connecting structure

The values are applicable for steel and cast steel with a limit of elasticity of at least 240 N/mm².

Type	Size	H1, min	H1, max	H2, min	r1, max	r2, max
MR	25	3.5	6	5	0.8	0.8
	35	4.5	7.5	6	0.8	0.8
	45	6	9.5	8	0.8	0.8
	55	7.5	12.5	10	1.3	1.3
	65	9.5	13.2	12	1.8	0.8
	100	15.5	16	22	1.8	1.8
BM	15	3	3.5	3	1	0.6
	20	3	4	4	0.9	1
	25	3.5	5	4.5	1.1	1.1
	30	4	5.5	5.5	1.3	1.3
	35	4.5	6.5	6	1.3	1.3
	45	5.5	8.5	7.5	1.3	1.3

4.12.2 Methods of orientation for the rail

The alignment of the guide rails depends on the required level of accuracy and must be carefully devised right at the design phase as the number and position of the locating surfaces are set at this point. See Section 4.14 - Configuration of the connecting structure.
A distinction is made between the following types of alignment:

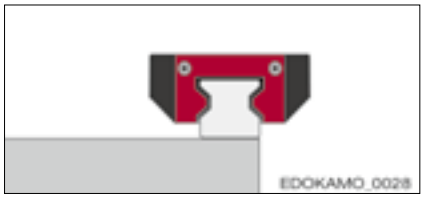

Features:

- No reference edge available
- Manual alignment without tools
- Not recommended
- Very low level of accuracy

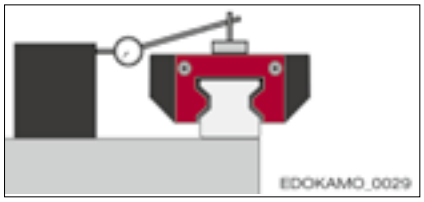

Features:

- No reference edge available
- Manual alignment with tools, e.g. aligning gauge, guide strip, dial gauge, installation carriage
- Depending on the complexity, average to high level of accuracy

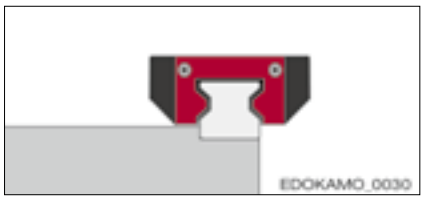

Features:

- Lateral datum in the machine bed
- Alignment by pressing against locating surface
- High level of accuracy, depending on the accuracy of the reference edge
- Minimal time required

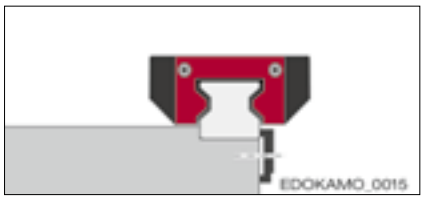

Features:

- Lateral locating surfaces and additional lateral clamping
- Alignment by pressing against locating surfaces using lateral fixing components
- Very high level of accuracy, depending on the accuracy of the reference edge
- Minimal time required

4.12.3 Lateral locating surfaces

When using lateral locating surfaces for installing the SCHNEEBERGER MONORAIL guideways it is recommended that the opposite side of the guide rail and carriage are also fixed with press-on components. This makes it easier to align the guideway and supports high lateral force absorption in both directions.
Different press-on components can be used for lateral clamping. The height of the transmittable lateral forces depends on the respective design and needs to be checked on a case by case basis.

Adjusting screws and clamping strips

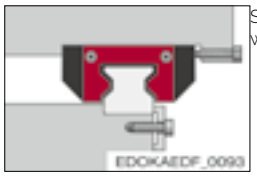

Single or double wedge strips

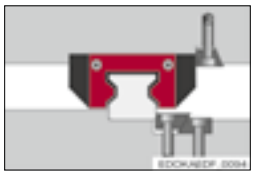

Shaft with countersunk head screw

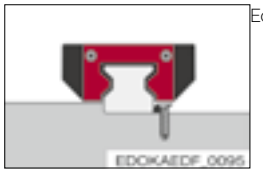

Eccentric screw

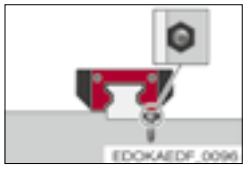

Clamping piece with conical chamfer

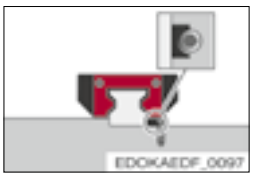

4.12.4 Installation methods

Different criteria must be taken into consideration when choosing an appropriate installation method and defining the number and arrangement of the locating surfaces. These are:

- Load
- Required accuracy
- Assembly effort
- Specific installation

Load

Forces in direction of tension/compression do not have any influence on the lateral locating surfaces. If loads from the side occur and they exceed the values for the permissible lateral force without locating surfaces (see section 4.11 - Fastening guide rail and 4.13 - Fastening carriages), then references and, where applicable, lateral fixings must be provided. Number and orientation depend on the forces that occur. The locating surfaces should be arranged depending on the direction of force of the main load. Lateral references should also be provided when vibrations and impacts occur. Otherwise increase the rigidity of the system.

Accuracy

Lateral references are recommended in case of stringent requirements in respect of guideway accuracy. The references make installation easier and reduce the complexity involved in achieving accuracy. The guideway accuracy is determined by the straightness of the locating surfaces and by the guide rail compression process and/or on the accuracy of the lateral fixing.

Assembly effort

Locating surfaces make installation easier and reduce the complexity involved in aligning the guide rails.
With careful manual alignment of the guideway, it is possible to dispense with lateral locating surfaces. When deciding on a method, the complexity of the installation should be carefully weighed up compared with the design and technical manufacturing complexity.

Specific installation

Locating surfaces and lateral fixings require additional installation space and access to the installation positions. It is therefore important to check whether the provided references and fixings are compatible with the installation location in the machine.
Set out below some typical installation methods are described, which differ in terms of the number and orientation of the locating surfaces, the transmittable lateral forces and the complexity of installation and should serve as a design aid:

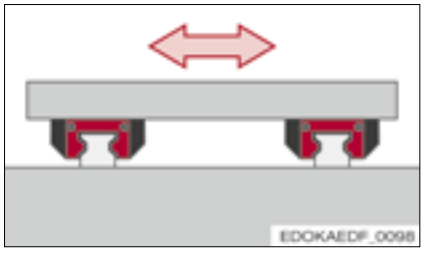

Features:

- No locating surfaces
- Small absorption of force from the side, forces are transmitted by means of friction locking
- High assembly effort

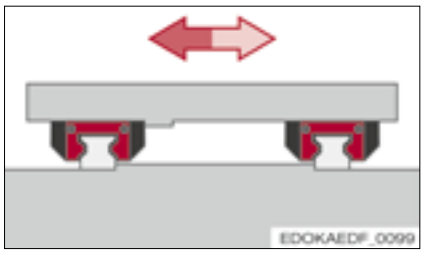

Features:

- Both guide rails with one reference, one carriage side with opposite reference
- Simple installation
- High lateral force absorption from one direction, e.g. for inclined bed axes or hanging installation

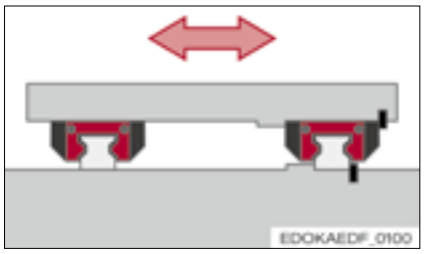

Features:

- A guide rail and its carriage with datum and lateral clamping
- For high lateral forces from both directions, a guide rail with carriage absorbs the majority of the lateral forces
- Relatively simple installation

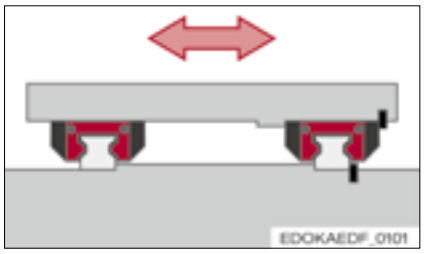

Features:

- Both guide rails and a carriage side with a reference, a guide rail and its carriage also with lateral clamping
- Simple installation
- High absorption of lateral forces from both directions

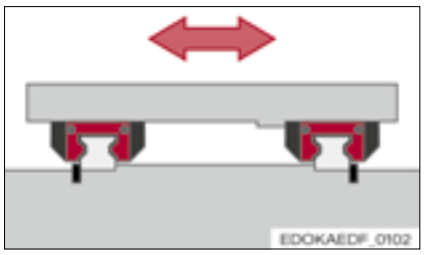

Features:

- Both guide rails and a carriage side with reference and lateral clamping
- Simple installation
- very high level of accuracy
- For very high lateral forces from both directions

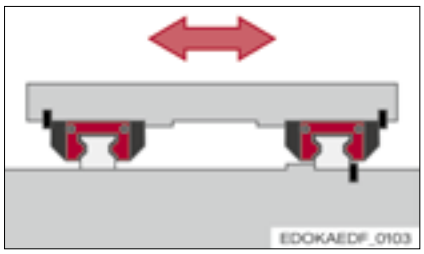

Features:

- A guide rail and two carriage sides with reference and lateral clamping
- Simple installation
- very high level of accuracy
- For very high lateral forces from both directions

4.12.5 Geometrical and position accuracy of the support surfaces

The capabilities of the SCHNEEBERGER MONORAIL guideways can only be achieved when mounted to a rigid structure with a high level of geometric accuracy. Inaccuracies in the attachment surfaces are partially compensated for by the elastic deformation of the MONORAIL guideways, however, they may affect overall accuracy, running behaviour, push force and service life. Unstable connecting surfaces increase the internal constraining forces of the guideways, which can also adversely affect service life.
When the tolerances set out below are observed for height deviation and parallelism, the influence on service life is negligible in practice.

Surface quality of the connecting surfaces

The surface quality of the supporting surface does not have a direct influence on the function and running behaviour of the guideway, but it does to the static accuracy. Carriages and guide rails are compressed against the location surfaces by the screw connections with a high level of force. To prevent settling behaviour of the connection, a high surface contact ratio is required. This is achieved by means of high level of surface quality. An average surface roughness of Ra 0.4 to 1.6 µm is recommended for the supporting and locating surfaces.

Permissible deviations in transverse direction

Use values in mm for the calculation.

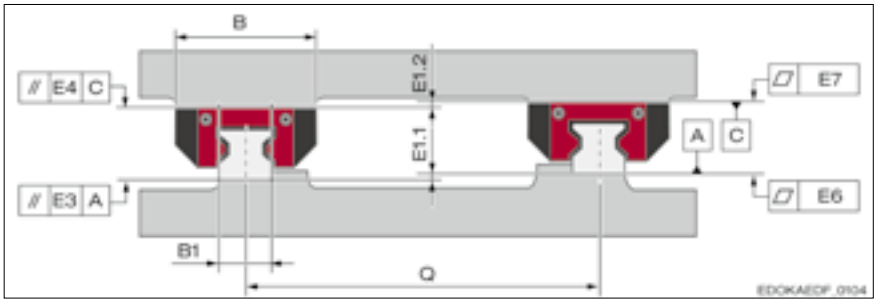

Permissible deviations in transverse direction:

B	Carriage width (mm)	E4	Parallelism of carriage supporting surface laterally
B1	Guide rail width (mm)	E6	Evenness of the guide rail supporting surface
E1	height deviation laterally	E7	Evenness of the carriage supporting surface
E3	Parallelism of guide rail supporting surface laterally	Q	Guide rail spacing system (mm)

Height deviation laterally E1=E1.1 + E1.2. This also includes the tolerance for the dimension A = MONORAIL height

$$E1 = v_{vsp} \cdot Q \cdot 10^{-4}$$

EDOKAEDF_0105

E1	height deviation laterally
Q	Guide rail spacing system (mm)
v_{vsp}	Preload factor

Parallelism of guide rail supporting surface laterally E3:

$$E3 = v_{vsp} \cdot B_1 \cdot 10^{-4}$$

EDOKAEDF_0106

B1	Guide rail width(mm)
E3	Parallelism of the guide rail supporting surface laterally
v_{vsp}	Preload factor

Parallelism of carriage supporting surface laterally E4:

$$E4 = v_{vsp} \cdot B \cdot 10^{-4}$$

EDOKAEDF_0107

B Carriage width (mm)
E4 Parallelism of the carriage supporting surface laterally
v_{vsp} Preload factor

Preload factor

The preload factor describes the influence of preload on the requirements in respect of accuracy of the supporting surfaces of carriage and guide rail.
A higher preload means higher rigidity and thus greater internal forces in case of deviations in the connecting surfaces.

Preload factor v_{vsp}

Preload	V0 / V1	V2	V3					
v_{vsp}	3.0	2.0	1.0					

Permissible deviations in longitudinal direction

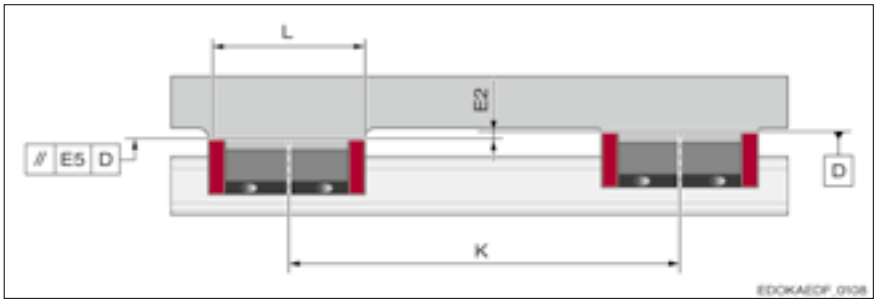

Permissible deviations in longitudinal direction:
L Total carriage length
E2 Height difference between carriage 1 and carriage 2
E5 Parallelism of carriage support longitudinally
K Carriage spacing longitudinally

Height deviation longitudinally E2 also includes the maximum dimensional difference ΔA in the carriages between the carriages on a guide rail:

$$E2 = t \cdot K \cdot 10^{-5}$$

EDOKAEDF_0109

E2 Height difference between carriage 1 and carriage 2
K Carriage spacing longitudinally
t carriage factor:
- 5 for MRA/C and BMA/C/F
- 4 for MRB/D and BMB/D/G

Parallelism of the carriage supporting surface longitudinally E5:

$$E5 = 4 \cdot L \cdot 10^{-5}$$

EDOKAEDF_0110

E5 Parallelism of carriage support longitudinally
L Total carriage length

Permissible tolerances of parallelism for the locating surfaces

For non-parallel aligned guide rails, the stroke movement leads to tensions in the guide system, which add additional load to the rolling contact surfaces. This can cause a reduction in service life. Otherwise this deteriorates the running accuracy of the guideway.
Thus the specified tolerances of parallelism Δ should be observed working on the assumption that the rigidity of the carriage seating is infinitely high.

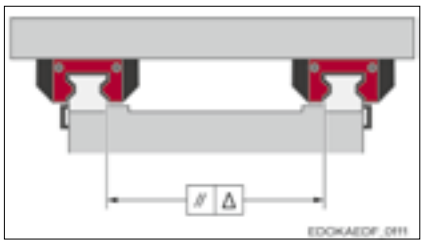

Permissible tolerance of parallelism Δ for the locating surfaces

Tolerances Δ for preload classes V0 - V3 (µm)

Size	V0	V1	V2	V3
15	13	12	11	6
20	13	12	11	6
25	14	13	12	7
30	16	15	14	8
35	18	17	16	9
45	22	21	20	11
55	-	25	23	13
65	-	29	27	17
100	-	35	33	20

Flatness of the location surfaces

For the flatness E6 of the guide rail support over the entire length, it is recommended to be guided by the values for running accuracy depending on the accuracy class in accordance with the diagram in Section 3 - Running accuracy.
The flatness of the carriage support E7 should not exceed the values in the table set out below.

Flatness of the carriage support E7 for MR and very conntecting structure

Size	Flatness (µm)
25	0.5
30	0.8
35	0.8
45	1
55	1
65	2
100	2

For ball products and less stiff connecting structures, flatness tolerances of 3 µm o 5 µm should not be exceeded.

4.13.1 Lubrication in its delivered condition

The carriages in the SCHNEEBERGER MONORAIL guideways are delivered as standard with a protective level oil or grease on the guideways. This is sufficient as a protection for the assembly of the guideway. A choice can be made between different options depending on the demands of the application, the required storage period and the lubrication type during operation. For order details, see SCHNEEBERGER MONORAIL and AMS product catalogue:

Oil protection (order code: LN)

Grease protection (order code: LG)

Full greasing (order code: LV)

Lubricants used

Lubricating oil for oil protection
Mineral-based lubricating oil with additives to protect against corrosion and foaming, with excellent VI and demulsifying behaviour, good sealing compatibility, high oxidation stability, viscosity grade ISO VG 32. See Section 1.12 - Lubrication.

Lubricating grease for grease protection
Mineral oil-based lithium complex saponified grease, with additives to protect against wear and corrosion, suitable for high loads, supple consistency, NLGI grade 2

The lubricants used by SCHNEEBERGER are mineral-oil-based grease or oil. They are compatible with other mineral-oil-based lubricants. However, their compatibility must be checked with the lubricant being used. To do this contact a SCHNEEBERGER representative.

Conservation method

Oil protection is sufficient for applications, which guarantee continuous lubrication during the installation and operation phase (order code: LN) or grease protection (order code: LG).

Caution

Component damage due to lack of lubricant

➡ Initial lubrication using the quantity of lubricant required for operation must be carried out by the customer prior to commissioning for oil or grease protection. For quantities of lubricant see Lubrication with grease and Lubrication with oil.

Note

➡ Full greasing is recommended for applications with manual relubrication (order code: LV). I.e. the carriage is fully replenished with grease around the rolling element recirculating units. Where this is the case initial lubrication is not required by the customer prior to commissioning.

4.13.2 Initial lubrication and subsequent lubrication

Carriages should never be commissioned without an initial lubrication. Compatibility with factory preservatives should be checked in respect of the lubricants being used. Lubricating greases with solid lubricating components such as graphite or MoS_2 should not be used. The required quantities of lubricant can be found in sections 4.15.6 - Lubrication with grease or 4.15.7 - Lubrication with oil.
An initial lubrication can be dispensed with if the carriages are pre-lubricated at the factory.

To maintain operation of SCHNEEBERGER MONORAIL guideways in addition to an initial lubrication regular subsequent lubrication is generally also a requirement. See Section 4.15.3 - Lifetime lubrication.
Use the same lubricant as the one used for the initial lubrication and check compatibility for subsequent lubrication.
The required quantities of lubricant and subsequent lubrication periods can be found in sections 4.15.6 - Lubrication with grease or 4.15.7 - Lubrication with oil.
The specifications apply for normal operating conditions and a clean working environment. In practice the consumption of lubricant, however, depends on many factors and can vary greatly depending on individual use. More frequent subsequent lubrication may be required to counter unwanted influences such as, deposits of coolant, high speeds, very short or long strokes, increased temperatures, high forces and vibrations.

4.13.3 Lifetime lubrication

Grease lubrication also when combined with additional lubricant dispensers such as the Lubrication plate SPL is a valid form of minimum-volume and is often referred to as lifetime lubrication. When operating SCHNEEBERGER MONORAIL guideways, as a matter of principle lubricant escapes from the carriage as a result of the linear motion and is distributed over the guide rails. Under the influence of dirt or coolants, this lubricant can bind together or be washed away and will therefore have to be replaced. Otherwise, the grease changes its consistency because of the diffusion of oil out of the carrier substance.
These circumstances call for subsequent lubrication. This is also applicable when using the lubrication plate SPL, with which the available quantity of lubricant is increased thanks to the additional oil reservoir and as a result the subsequent lubrication intervals are significantly prolonged.
Subsequent lubrication volumes and intervals must be determined under actual operating conditions. Depending on the individual application, i. e. according to the C/P ratio, the stroke of the carriage and environmental influences, the useful service life of the grease can be between a few hundred hours and several years. As a rule, the maximum storage and operating period for the lubricants is three to four years, because they are subject to an ageing process and after this time period they become unusable as a result of chemical changes. It is recommended that the lubricant manufacturers' instructions are observed!
SCHNEEBERGER cannot guarantee, that with a single lubrication, the calculated service life of the SCHNEEBERGER MONORAIL guideways will be achieved!
Without any subsequent lubrication, the service life of the SCHNEEBERGER MONORAIL guideway will depend on the useful service life of the grease!

4.13.4 Precautionary measures

The SCHNEEBERGER MONORAIL guideways should be supplied with sufficient lubricant adapted to the application and the environmental conditions. In selecting a lubricant, we recommend that you contact a lubricant manufacturer directly.
Before using lubricants if you have no experience or claims made by the lubricant manufacturer, you should always check for compatibility with:

- Other lubricants used
- Anti-corrosive agents
- Coolants
- Synthetic materials (elastomers and duroplastics), e.g. seals, front plates
- Non-ferrous and light metals.

Use of coolants

If the linear guideways are being affected by coolants, as a result of the emulsifying effect the lubricant can be washed out of the can and thus have a detrimental effect on the operational life of the guideways. Consequently, when using coolants the guideways should always be protected from direct contact with the liquid media by means of covers. The compatibility of the coolant with the lubricant needs to be checked. Otherwise, the subsequent lubrication intervals need to be shortened accordingly.

4.13.5 Lube connections

The front plates have a large number of lube connection options. It is therefore possible to optimise the lubrication supply to the carriage to meet structural design. Either a lubricating nipple or a central lubrication system can be connected to each lube port. As standard, all four tracks are lubricated through one connection.
As a special feature for certain installation positions, SCHNEEBERGER systems provide for independent lubrication of both sides of a carriage (S32, S42 and S60). This enhances the lubrication reliability of the guideway and thus the service life of the machine.
Location of the lube connections is defined with a view towards the locating side R1 in accordance with the following images.
When lubricating from above, an O-ring is inserted.
All unused lube connections are closed with grub screws.

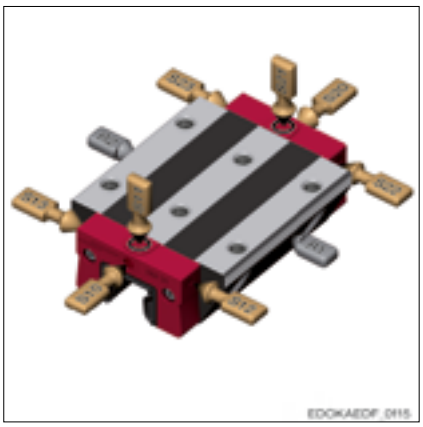

Carriage lube connections for standard lubrication
R1 Locating surface
R2 Counter-locating surface

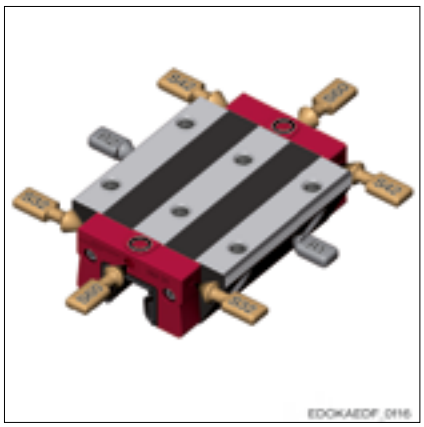

Carriage lube connections for independent lubrication of the tracks

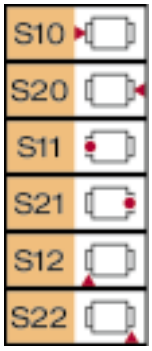

centre left
centre right
top left
top right
side bottom left
side bottom right

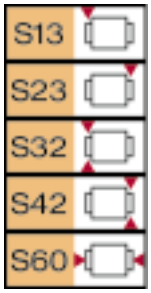

side top left
side top right
side left
side right
middle

Connecting thread in the front plate front and side

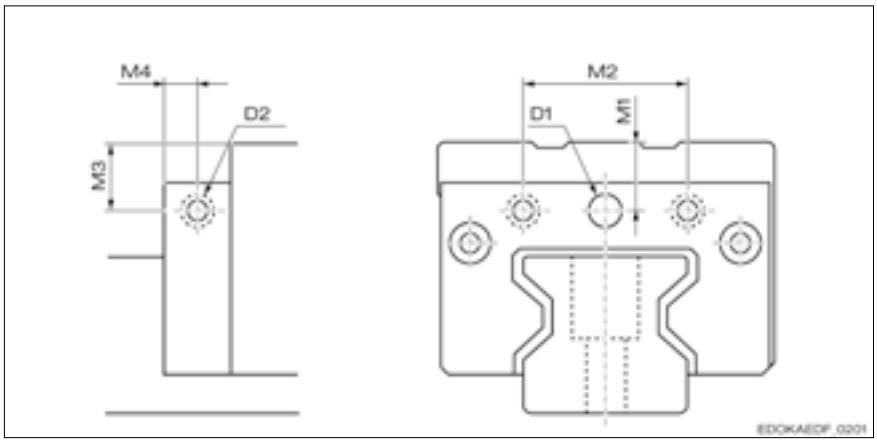

Connecting thread in the front plate front and side:
D1 Connecting thread diameter front
D2 Connecting thread diameter side
M1 Spacing dimension lubrication front plate front
* Connection for optional lubricating facility
M2* Spacing dimension lubrication front plate front
M3 Spacing dimension lubrication front plate side
M4 Spacing dimension lubrication front plate side

Type	Dimensions (mm)					
	M1	M2	M3	M4	D1	D2
MRA/B/F/G 25	5.5	-	-	-	M6	-
MRC/D/E 25	9.5	-	-	-	M6	-
MRA/B 35	7	32	7	6.5	M6	M6
MRC/D/E 35	14	32	14	6.5	M6	M6
MRA/B/F 45	8	40	8	7.5	M6	M6
MRC/D 45	18	40	18	7.5	M6	M6
MRA/B/G 55	9	50	9	8.5	M6	M6
MRC/D 55	19	50	19	8.5	M6	M6
MRA/C 65	13	64	13	12.5	M6	M6
MRB/D 65	13	64	13	12.5	M6	M6
MRB 100	12.5	124.5	12.5	33	M6	M6

Type	Dimensions (mm)					
	M1	M2	M3	M4	D1	D2
BMA/F 15	4	-	4	4	M3	M3
BMC 15	8	-	8	4	M3	M3
BMA/B 20	5.2	-	5.2	5	M6	M3
BMC/D 20	5.2	-	5.2	5	M6	M3
BMA/B/F/G 25	5.5	-	5.5	6	M6	M6
BMC/D/E 25	9.5	-	9.5	6	M6	M6
BMA/B/F/G 30	7	-	7	6	M6	M6
BMC/D/E 30	10	-	10	6	M6	M6
BMA/B/F/G 35	7	-	7	6.5	M6	M6
BMC/D/E 35	14	-	14	6.5	M6	M6
BMA/B/F/G 45	8	-	8	7.5	M6	M6
BMC/D 45	18	-	18	7.5	M6	M6

Lubrication connection from above

It is also possible to lubricate from above. The desired location should also be specified for this in the order. The required rework is carried out by SCHNEEBERGER.

Order details: top left -S11
top right: -S21

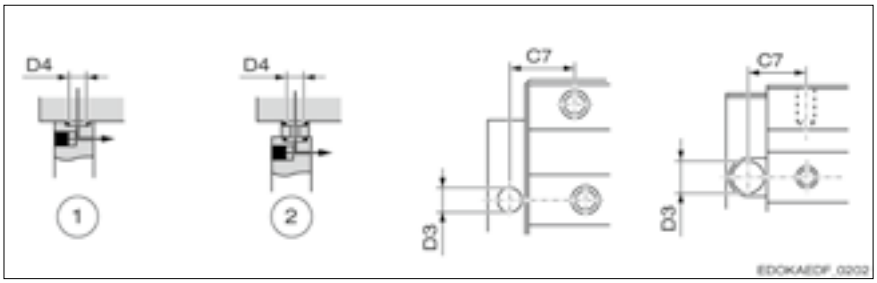

Lube connections from above:
1 for MRA/MRB, BMA/BMB, BMC/BMD, BME, BMF/BMG
2 for MRC/MRD, MRE

D3 Counterbore diameter
D4 Maximum diameter of the lubrication fixing hole
C7 Spacing from fixing hole to the lubrication fixing hole

C7 (mm)	MR 25	MR 35	MR 45	MR 55	MR 65	MR 100
MRA	12	14	17	21.5	27.75	-
MRB	23.2	27.5	34.5	42.5	54	67
MRC	17	20	27	31.5	47.75	-
MRD	20.7	22.5	34.5	42.5	49	-
MRE	17	20	-	-	-	-
MRF	17	-	27	-	-	-
MRG	20.7	-	-	42.5	-	-
D4	6	6	6	6	6	8
D3	10	10	10	10	10	12.4

C7 (mm)	BM 15	BM 20	BM 25	BM 30	BM 35	BM 45
BMA	9.05	10.25	13.5	15.7	15.8	17.05
BMB	-	18.25	23	26.7	28.55	32.8
BMC	11.05	12.25	18.5	21.7	21.8	27.05
BMD	-	13.25	20.5	22.7	23.55	32.8
BME	-	-	18.5	21.7	21.8	-
BMF	11.05	-	18.5	21.7	21.8	27.05
BMG	-	-	20.5	22.7	23.55	32.8
D4	4	6	8	8	8	8
D3	8	10	12	12	12	12

O-rings are required for sealing the lube connection. The following table shows the size of the O-ring for the respective carriage type. Where D5 designates the O-ring internal diameter and D6 the O-ring thickness.

Type	D5	x	D6
BM 15	4.48	x	1.78
BM 20, MR 25-55	6.75	x	1.78
BM 25-45, MR 100	7.3	x	2.2
MR 65	6.5	x	2

For standard lubrication options that can be delivered and order details, see SCHNEEBERGER MONORAIL and AMS product catalogue. The designation Sxx is required in the carriage order code. Other lubrication connection options for special individual circumstances are available on request.

4.13.6 Lubrication with grease

SCHNEEBERGER recommends KP2K lubricating grease in accordance with DIN 51825 or liquid grease GP00N and GP000N accordance with DIN 51826.

Initial lubrication

Before commissioning, an initial greasing of the carriages using the specified quantities must be completed as part of the initial lubrication. This also applies if lubrication plates are also used. The quantities indicated are applicable per carriage. If two connections per carriage are used, then the values have to be halved correspondingly.

Note

➡ While greasing, the carriage needs to be moved around the rail several times by 3 times its length, or at least by a single carriage length in case of bilateral lubrication. In the event that the maximum stroke < carriage length, take note of Section 4.13.8 - Application know-how on lubrication - requirements in respect of lubrication in special operating conditions.

Carriage types MR*	MR 25	MR 30	MR 35	MR 45	MR 55	MR 65	MR 100
A, C, E, F	1.9	2.2	2.9	5.5	9.1	15.5	32
B, D, G	2.2	2.8	3.8	6.9	11.2	20.2	40
P	-	-	-	-	-	24.8	-
Carriage types BM*	BM 15	BM 20	BM 25	BM 30	BM 35	BM 45	
A, C, E, F, H, L	0.9	1.7	2.8	4.7	6.6	12.6	
B, D, G	1.6	2.1	3.5	5.8	8.1	15.6	
J, K, M, N	0.7	1.4	1.9	3.3	4.7	-	

Note: * Amount of grease per carriage (cm^3)

Subsequent lubrication quantities and intervals

Subsequent lubrication should take place depending on carriage load and external factors. As a guideline at a speed of v = 1 m/s, normal temperature T = 20°C -30°C and a C/P ratio of ≥2 the following formula should be used for calculations:

$$\text{Nachschmierintervall} = C / P \cdot 100\ \text{km}$$

EDOKAEDF_0117

C dynamic loading capacity
P Dynamic equivalent force

The C/P ratio is the ratio between dynamic loading capacity C100 (for values, see SCHNEEBERGER MONORAIL and AMS product catalogue) and the dynamic equivalent force P (see Section 4.10.2 - Calculating service life).
The quantity of lubricant to be provided in accordance with this interval can be taken from the following table.

Carriage types MR*	MR 25	MR 30	MR 35	MR 45	MR 55	MR 65	MR 100
A, C, E, F	0.4	0.8	1.1	2.1	3.2	5.9	13.6
B, D, G	0.5	0.9	1.3	2.4	4	7.4	17
P	-	-	-	-	-	9.4	-
Carriage types BM*	BM 15	BM 20	BM 25	BM 30	BM 35	BM 45	
A, C, E, F, H. L	0.3	0.6	1.1	1.7	2.5	5	
B, D, G	0.4	0.8	1.4	2.1	3.2	6.1	
J, K, M, N	0.3	0.5	0.9	1.5	2.1	-	

Note: * Amount of grease per carriage (cm^3)

Note

➡ The specified volumes of lubricant and lubricating intervals are valid for both grease and fluid grease.

➡ The lubricating volumes for MONORAIL MR carriages are also applied for AMSA 3B, AMSD 3B and AMSABS 3B, the lubricating volumes for MONORAIL BM carriages also apply in respect of AMSA 4B, AMSD 4B, AMSABS 4B and BZ carriages.

the quantities and intervals can only be achieved under actual operating conditions. The lubrication is sufficient when a clearly visible film of grease can be distinguished on the surface of the guide rail. Irrespective of running performance, we recommend re-lubricating at least every 3 months. In case of unfavourable operating and environmental conditions, particularly with deposits of coolant, heavy contamination, high loads and temperatures, more frequent replenishment may be required.

4.13.7 Lubrication with oil

Initial lubrication

Before commissioning, the carriages have to be filled with the indicated quantities for initial lubrication. In so doing, the total quantity of oil should be injected in a single impulse or in several impulses in short succession while the carriage is being moved. The specified quantities are applicable per carriage with one connection. If two connections per carriage are used, then the values have to be halved correspondingly. In case of a specific installation orientation or short stroke, take note of the instructions set out in Section 4.15.8 - Application know-how on lubrication - requirements in respect of lubrication in special operating conditions.

Subsequent lubrication quantities and intervals

Carriage types MR*	MR 25	MR 30	MR 35	MR 45	MR 55	MR 65	MR 100
Any installation orientation	0.3	0.45	0.6	0.9	1.4	2	2.3

Carriage types BM*	BM 15	BM 20	BM 25	BM 30	BM 35	BM 45
Any installation orientation	0.2	0.5	0.6	0.9	1.1	1.2

Note: * Amount of oil per carriage for all carriage types (cm^3)

Subsequent lubrication should take place depending on carriage load and external factors. As a guideline at a speed of v = 1 m/s, normal temperature T = 20°C -30°C and a C/P ratio of ≥2 the following interval should be assumed for subsequent lubrication:

$$\text{Nachschmierintervall} = 30\ \text{km}$$

EDOKAEDF_0118

The lubrication quantity to be provided in accordance with this interval can be taken from the following table:

The required number of fill pulses can be calculated as a factor of the subsequent lubrication volume as set out in the table and according to the piston distributor size

Carriage types MR*	MR 25	MR 30	MR 35	MR 45	MR 55	MR 65	MR 100
Normal installation orientation	0.15	0.2	0.25	0.35	0.5	0.7	1.2
Any installation orientation	0.3	0.4	0.5	0.7	0.9	1.2	2.3

Carriage types BM*	BM 15	BM 20	BM 25	BM 30	BM 35	BM 45
Normal installation orientation	0.07	0.17	0.2	0.3	0.35	0.4
Any installation orientation	0.14	0.34	0.4	0.6	0.7	0.8

Note: * Amount of oil per carriage for all carriage types (cm^3)

used. The lubrication cycle is then worked out by diving the subsequent lubrication interval by the number of fill pulses that is determined.

$$\text{Schmierzyklus [h]} = \frac{\text{Kolbenverteilergröße [cm}^3\text{] - Nachschmierintervall [h]}}{\text{Nachschmiermenge [cm}^3\text{]}}$$

EDOKAEDF_0119

Example:

When v = 0.2 m/s and 100% operating time, the lubrication interval for 30 km corresponds to approximately 40 operating hours. For a subsequent lubrication volume of 0.5 cm^3 for MR 55 in a normal installation orientation as set out in the table and according to the piston distributor size of 0.1 cm^3, it follows for example that a fill pulse volume of oil of 0.1 cm^3 should be given every 8 hours (8 h = 0.1 cm^3 / 0.5 cm^3 * 40 h).

Note

- ➡ In case of a specific installation orientation or short stroke, take note of the lubrication instructions set out in Section 4.15.8 - Application know-how on lubrication - requirements in respect of lubrication in special operating conditions.
- ➡ The lubricating volumes for MONORAIL MR carriages are also applied for AMSA 3B and AMSD 3B, the lubrication volumes for MONORAIL BM carriages also apply in respect of AMSA 4B, AMSD 4B and BZ carriages.

The values indicated above are only guideline values. An accurate determination of the quantities and intervals can only be achieved under actual operating conditions. Lubrication is sufficient when an accumulation of lubricant forms when pushing the carriage in front of the wiper, or an accumulation of lubricant forms at the turn-around points of the carriage on the guide rail. It is recommended to re-lubricate during operation at least once per month and after a a lengthy machine shut-down prior to recommissioning. In case of unfavourable operating and environmental conditions, particularly with deposits of coolant, heavy contamination, high loads and temperatures, more frequent replenishment may be required.

4.13.8 Applicationknow-howonlubrication-requirementsinrespectoflubrication in special operating conditions.

The choice of lubrication system for a linear guideway system is essentially influenced by the type of application and operating conditions. Specific applications impose specific requirements

- Lubricant type and lubricant properties
- Method of application
- Location of the lube connections
- Lubrication volume and lubricating cycles

Furthermore, different factors affect the frequency of lubrication:

- Coolant effect: Wash out effects by coolant
- Length and stroke ratio of the movement of the carriage
- Machine-based covers
- Method of carriage sealing Smooth-running wipers, additional wipers

When using a centralised lubricating system, as well as the choice of lube connection and of an appropriate lubricant it is important to note that the lubricant lines are dimensioned to be as short and sufficient as possible. Piston distributors should be fitted where possible close to the lubrication points. The lubricating system manufacturer's instructions should be observed.

Typical examples of use and their requirements are set out below:

Installation orientation

In the case of grease lubrication it is ensured in every installation orientation that all four tracks of the carriage are supplied with lubricant with one lube connection.
In the case of oil lubrication and a horizontal or vertical installation, no particular precautions need to be taken either. Because of the adapted lubrication channel cross sectional areas in the front plates, this is also applicable for an installation with the guideways rotated by180 ° around the longitudinal axis of the guide rails.

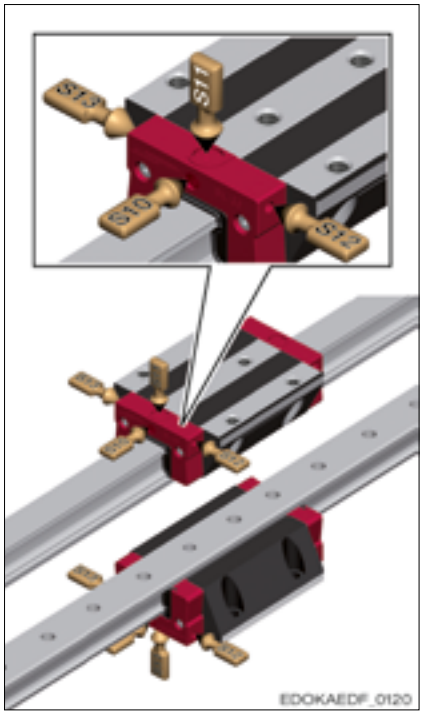

Oil lubrication in a horizontal installation

– Lube connections S10 to S23 can be used.

For a vertical installation or one inclined around the transverse axis, the lube connection should be provided in the upper front plate.

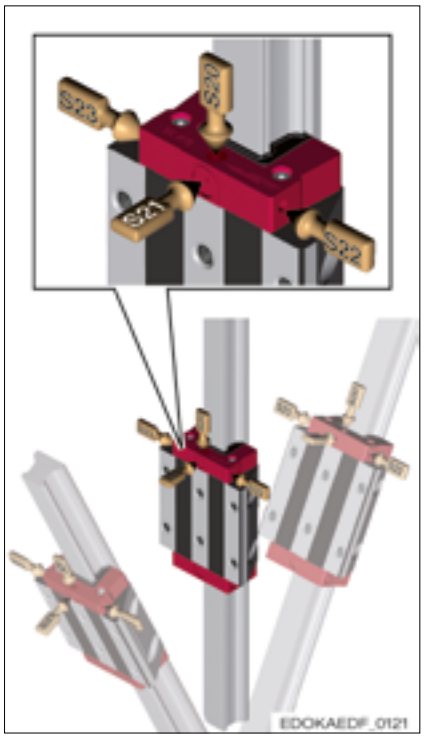

Oil lubrication for vertical installation and installation inclined around the transverse axis

– Lube connections S10 to S23 can be used.

When oil lubrication is provided or lubrication using fluid grease NLGI class 000 and an installation inclined around the longitudinal axis of the guide rails, special measures are required as oil has the tendency based on its fairly low viscosity to flow downwards due to gravity and therefore to one end of the track. It has to be ensured that all four carriage tracks are supplied with sufficient lubricant. Depending on the type of guideway, this is achieved in different ways.

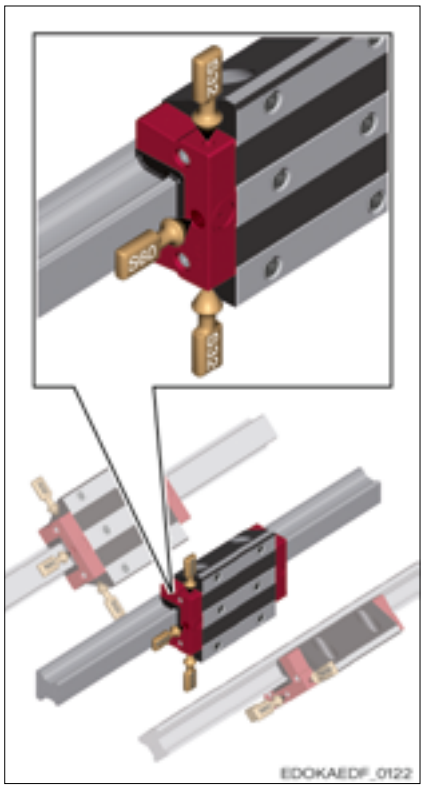

Installation inclined around the guide rail longitudinal axis
– Use separate lubrication
– Lube connections S32, S42 and S60.

The following specifications provide an overview of the measures required depending on the carriage type to ensure lubrication with oil lubrication and when the installation

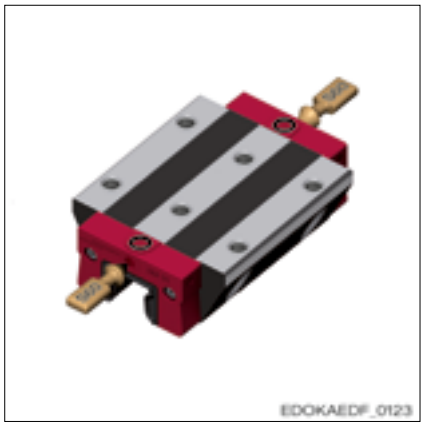

Type
– MR 25

Measure
– Separate lubrication
– 2 connections per carriage front centre
– Order code -S60-

Lube connections
– S60

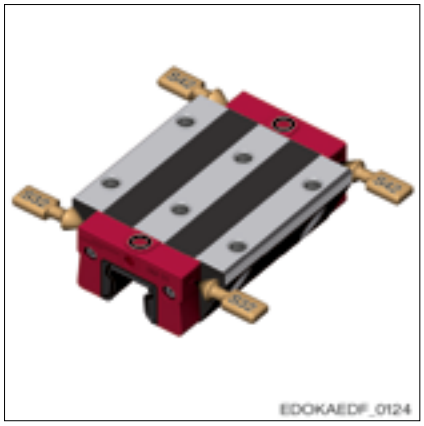

Type

– MR 35 - MR 100
– BM 15 - BM 45

Measure
– Separate lubrication
–,2 connections per carriage
– Order code -S32- or -S42-
– depending on the installation orientation

Lube connections
– S32
– S42

orientation is rotated around the longitudinal axis:

Note
➡ In the case of special installation orientations, the customer should include an installation drawing with the inquiry when obtaining a recommendation from SCHNEEBERGER.

In the case of a single lubrication connection per carriage, grease, or liquid grease, is preferred over oil. See Section 4.15 - Lubrication.
The specification for MONORAIL BM also apply in respect of carriages for MONORAIL BZ. For systems with MONORAIL AMS and a particular installation orientation, the customer should seek a recommendation about lubrication from SCHNEEBERGER.

Coolants

In the case of direct contact by the linear guideways with water soluble coolants, there is a risk due to their emulsifying behaviour that they mix with the lubricant and wash it off, which can as a result lead to inadequate lubrication and corrosion of the metal surfaces.
Consequently, only lubricants may be used, which have high corrosion resistance and good demulsifying behaviour. Otherwise it is necessary to re-lubricate in larger quantities and at shorter intervals.

Use of aqueous media, alkalis and acids

With applications in which the linear guideways are exposed to aggressive liquid media such as, for example, condensation or splashes, salt solutions or diluted acids and alkalis, lubricating greases with corrosion-inhibiting properties should be used. They should otherwise have excellent demulsifying behaviour as well as high adhesiveness and excellent sealing effect to prevent the lubricant from being washed off or from being mixed with the aggressive media. Lubricating oils are not generally suitable for such applications.

High forces

With high dynamic forces there is a risk that due to the high surface pressure on the points of contact the lubricating film is pulled off resulting in increased wear due to inadequate lubrication.
Such applications require lubricants with so-called EP additives (EP = "Extreme Pressure") and high shear strength. These, for example, include lubricating greases with the KP or GP designation, which are better suited to high-force applications such as lubricating oils. It is important to note with lubricating oils that they at least have the CLP classification and high viscosity.
To increase the absorption of pressure and to avoid wear, solid lubricants such as molybdenum sulphide and graphite are often used. Solid lubricants minimise wear during the start-up phase or in emergency running situations. Molybdenum sulphide

and graphite can actually form uneven deposits on roller-contact bearings and profile rail guideways. Such surface unevenness can lead to localised concentrations of stresses and thus to premature failure on rolling elements.

High speeds

For high speeds lubricants with low viscosity, that is with low internal friction and good heat dissipation are required. Lubricating oils are more suitable than lubricating greases for this.

Short stroke and vibrations

Short stroke is defined as less than two carriage lengths, as for this the rolling elements in the carriage no longer revolve completely and so the lubricant in the carriage is no longer able to be optimally distributed.
In such instances, two lube connections per carriage are recommended, that is one lubrication point on both sides. The lubrication quantities per carriage, however, remain the same, that is the table values shown in the relevant section are halved per connection.
For very short strokes (less than the diameter of a single ball or roller) or in case of vibrations, oscillating sliding and rolling movements occur on the rolling element points of contact , which can destroy the film of lubricant with a risk of fretting corrosion and premature guideway failure.
This requires lubricants with excellent pressure absorption capacity, good wetting behaviour and corrosion protection properties.
Grease lubrication should be favoured above oil lubrication for which more frequent subsequent lubrication is necessary than under normal circumstances due to the shorter grease service life.
For oil lubrication, use oil with high viscosity VG 220.
It is also recommended that a so-called lubricating stroke (distance travelled > 2x carriage length) is carried out occasionally.

Long stroke

With long strokes more lubricant is delivered from the carriages and is distributed over a larger surface area. This requires larger quantities of lubricant and shorter lubrication intervals than with a normal stroke. Before commissioning the entire guide rail surface should be rubbed with the lubricant so that from the start there is a closed film of lubricant on the tracks and under the wipers.

Temperature

The ability to form a stable film of lubricant under specific operating conditions is essentially determined by the viscosity of the lubricant. Lubricating oils and lubricating greases have the property that their viscosity depends on the temperature. It decreases as the temperature rises and increases as the temperature falls.
This means that the lubricant is more viscous at low temperatures than at high temperatures. For this reason every lubricant has a specific temperature operating range in which its lubricating properties can be guaranteed. This temperature range is generally greater in synthetic lubricants than in mineral-based ones as the viscosity-temperature ratio is not as greatly pronounced in them.
To maintain the reliability of lubrication in any operating condition it is important to ensure that a lubricant is selected whose permissible temperature range covers all temperatures occurring during operation.
As most applications of linear guideways take place at normal temperatures from about 0°C to +40°C, generally standard lubricating greases and standard oils are sufficient for this.
At very low temperatures, however, a special lubricant with low viscosity is required and at very high temperatures a lubricant with high viscosity.
In addition, however the permissible temperature operating range of the linear guideways also needs to be noted.

Dirt, grinding dust

If linear guideways are exposed during operation to dirt such as, dust or fine swarf from the machining process, it is important to prevent this dirt from getting into the carriages. In addition to the lubrication, effective protection of the carriages by appropriate covers and additional wipers is also very important.
In principle, both lubricating oils can be used due to their rinsing effect and lubricating greases due to their sealing properties. Compared with normal conditions, subsequent lubrication must take place using more lubricant and at shorter intervals. With dust of all kinds, commercially available oil-air lubricants can be used, which create a sealing air effect due to excess pressure in the carriage thereby preventing dust from getting in. MONORAIL carriages are ideally suited to this due to their excellent sealing properties.
Otherwise cleaning strokes should be completed regularly to free the guide rail surface of any stuck on dirt. Similarly a cleaning stroke should be completed prior to any extended machine shut-down, e.g. at weekends.

Machine tools

It can generally be assumed that for applications in machine tools high static and dynamic forces occur, that often liquid media, e.g. coolants act on the guideways and that the linear guideways are used over a long period of time or over long running distances.
This calls for the following characteristics in lubricants:

- Effective force transmissibility
- High-pressure resistance
- Resistance to ageing
- Corrosion resistance
- Transport in centralised lubricating system

Cleanroom

When used under cleanroom conditions absolutely no particle emissions can escape from the linear guideway, e.g. from the seal and the lubricants. Other requirements include minimal and consistent push force of the carriages and extended maintenance-free operating time. Wipers are often dispensed with on the carriages.
Due to their sealing effect, lubricating greases are usually used. They should be suitable for long-term lubrication, demonstrate lower evaporation rates and excellent adhesion and have smooth running properties.

High vacuum.

For applications in a vacuum it is important that the lubricant does not escape at high temperatures either and emit particles into the atmosphere. Consequently, special lubricating greases are used here, which demonstrate very low vapour pressures.

Rack drives

Both oil and grease lubrication are used to lubricate racks and pinions.
Lubricating grease is used for manual brush lubrication. With the integral rack drive on the MONORAIL BZ linear guideway, the supply of lubricant to the gear racks is usually made continuously using a lubricating pinion made of felt, which is fed by a lubricant dispenser. Either a high-viscosity lubricating oil, e.g. ISO VG 460 or an NLGI class 0 fluid grease is used for this.
Generally the lubricants should demonstrate good force transmissibility and high shear strength as well as adequate adhesive strength and high viscosity to prevent the lubricant from being shaken off the pinions.

4.13.9 Lubrication plate SPL

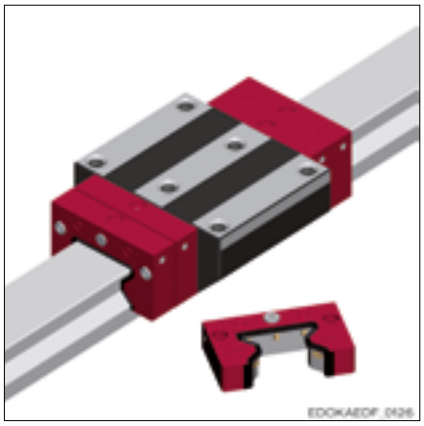

Carriage with lubrication plate SPL

Function and application

Lubrication plates SPL have an integral oil reservoir and are mounted on both sides of the carriage in each case in front of the front plates. Via several points of contact they supply the rolling element tracks and the upper side of the guide rail evenly and over an extended period with lubricant. Consequently, the seals on the carriage are protected against wear and their service life is extended. Together with initial lubrication of the carriages with grease the maintenance intervals can be significantly extended with the lubrication plates under favourable conditions. They are ideally used in dry and clean environments, such as in handling technology or on the ancillary axes of tool machinery.

Installation positions

The SPL guarantees an assured supply of lubricant in all installation positions.

Delivered condition and fill quantities

General

The SPL is always delivered ready for installation, i.e., filled with oil. The lube connections for subsequent lubrication on the front end and on the sides of the narrow sides are in each case closed with a set screw pin or a screw.

Factory fitted on the carriage

When delivered together with a MONORAIL system or individual carriages, in each case two lubrication plates are installed on the carriage at the works. The carriages are also filled with a roller bearing grease (mineral-oil based lithium soap grease).

Delivery as accessory/individual component (order number)

When delivering the SPL for retro-fitting, they are supplied in pairs ready for installation, i. e., filled with oil.

Initial oil fill in the factory

The SPL is filled with oil in the factory using KLÜBER Lamora D 220 type and is therefore immediately ready for use.

SPL xx-MR*	MR 25	MR 35	MR 45	MR 55	MR 65	-
	3.1	9.4	15.6	26.8	61	-
SPL xx-BM*	BM 15	BM 20	BM 25	BM 30	BM 35	BM 45
	0.7	2	3.4	4.1	8.3	15.6

Note: * Amount of oil for each 1x SPL (cm^3)

Subsequent lubrication quantities and intervals

Refilling of the lubrication plates should take place depending on the load and other operating conditions for the guideways. As a guideline, the following refilling intervals can be assumed:

SPL - MR*	MR 25	MR 35	MR 45	MR 55	MR 65	-
	2500 km	2500 km	5000 km	5000 km	5000 km	-
SPL - BM*	BM 15	BM 20	BM 25	BM 30	BM 35	BM 45
	2500 km	2500 km	2500 km	2500 km	2500 km	5000 km

The quantity of oil to be supplied according to these refilling intervals can be taken from the following table:

SPL xx-MR*	MR 25	MR 35	MR 45	MR 55	MR 65	-
	2.2	7	11	19	43	-
SPL xx-BM*	BM 15	BM 20	BM 25	BM 30	BM 35	BM 45
	0.5	1.4	2.4	2.9	5.8	10.9

Note: * Amount of oil for each 1x SPL (cm^3)

Note

➡ When refilling of the lubrication plates, KLÜBER Lamora D 220-type oil should be used. Special bottles of oil can be obtained as an accessory. When refilling with other lubricants, SCHNEEBERGER will not assume any liability. More details on this can be found in the Operation, Maintenance and Service Section.

The SPL is refilled using lubricating fixing holes at the front, middle and side. A detailed description is included in the SPL installation instructions, which can be downloaded from www.schneeberger.com and Downloads.

The values indicated above are only guideline values. The quantities and intervals can only be accurately determined under actual operating conditions. The lubrication is sufficient when a clearly visible film of oil can be seen on the surface of the guide rail. Irrespective of the distance travelled, refilling is necessary after a maximum of 12 months operation. In case of unfavourable operating and environmental conditions, particularly in case of dirt, high loads and temperatures, more frequent replenishment may be required.

When lubrication plates are retro-fitted, the carriages also need to be filled with grease. The recommended quantities of lubricant can be found in the Section Lubrication with grease. When retro-fitting BM carriages make sure that the front plate needs to be held securely when loosening the fastening screws as otherwise the balls will fall out.

Use of coolants

For applications incorporating coolants it is important to ensure that the linear guideways are protected with appropriate covers and additional wipers on the carriages before any direct contact with the fluid media.

When coolants are deposited directly onto the guideways, due to the risk of the lubricating oil being washed out of the SPL their use is not recommended.

4.14.1 Standard - seals

The carriages in the SCHNEEBERGER MONORAIL guideways are equipped as standard with double lip cross wipers on the front ends and in each case two top and bottom longitudinal wipers per side. These are responsible for ultra-efficient sealing. Consequently, dirt penetration is effectively prevented and loss of lubricant is minimised to achieve extended service life of the guideway.

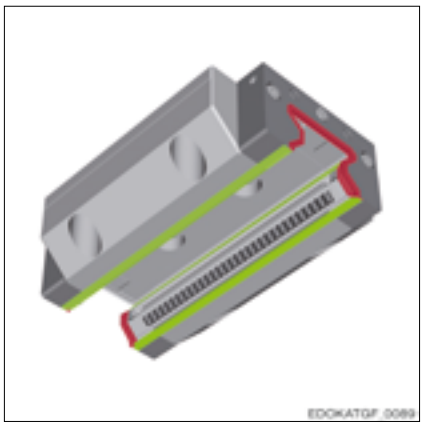

Carriages with longitudinal wipers (green) and cross wipers (red)

The MONORAIL BM ball guideways are frequently used for applications with minimal dirt, for which however there is a requirement for low push forces. Consequently special smooth-running wipers and an option of no cross wipers for cleanroom applications are offered for these guideways alongside the standard cross wipers.

MONORAIL BM wiper variants

Prerequisite for optimal functioning of the sealing system is adequate lubrication and the smoothest possible wiping surface without projecting edges.

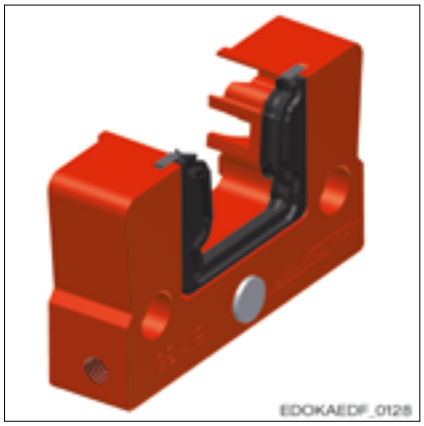

Wiper type
– Standard wipers

Order code
– QN

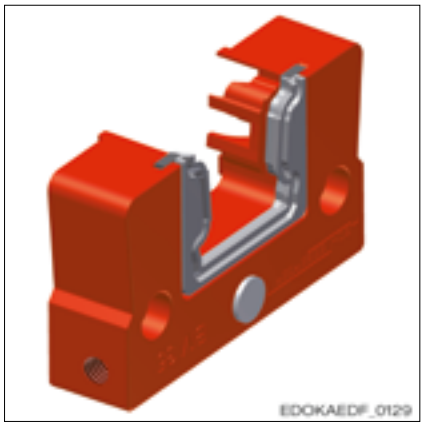

Wiper type
– Smooth-running wipers

Order code
– QL

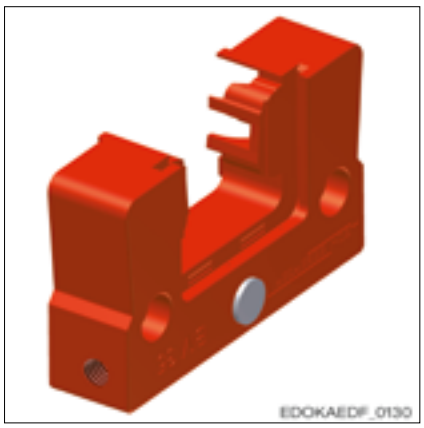

Wiper type
– Without cross wipers

Order code
– QO

4.14.2 Additional wipers

For special operating conditions such as heavy accumulation of dirt, deposits of swarf or coolant, SCHNEEBERGER offers additional seals, which are fitted in front of the carriage and offer additional mechanical protection.

Additional wipers made of NBR

The additional wipers made of NBR (nitrile rubber) provide additional protection to the carriages in heavily contaminated environments. They consist of a carrier plate, on which a very strong single-lipped sealing lip is fitted. As the wipers can be pushed over the guide rail cross section due to their flexibility, retrofitting is possible without any need to remove the carriage from the rail.
The additional NBR wiper is available for all MR and BM carriage types. The order code is "ZBN xx" for BM carriages and "ZCN xx" for MR carriages, where "xx" stands for the size.

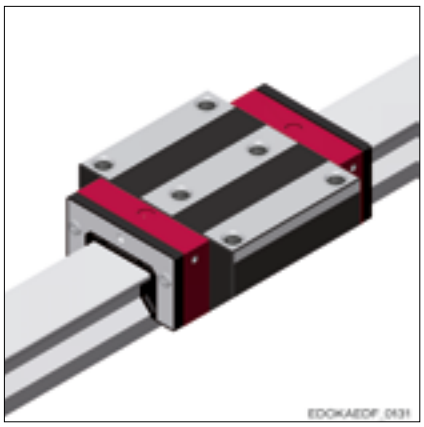

Carriages with additional NBR wipers

Additional wipers made of Viton

Like NBR wipers, additional Viton wipers provide additional protection to the carriages in heavily contaminated environments. However, they are also suitable for applications with aggressive coolants, as Viton® (fluorinated rubber) is resistant to chemicals and exhibits high temperature resistance. As the wipers can be pushed over the guide rail cross section due to their flexibility, retrofitting is also possible without any need to remove the carriage from the rail.
The additional Viton wiper is available for all MR and BM carriage types. The order code is "ZBV xx" for BM carriages and "ZCV xx" for MR carriages, where "xx" stands for the size.

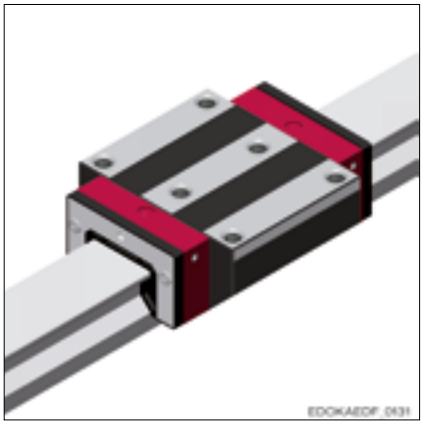

Carriages with additional Viton wipers

Metal wipers

Made of stainless steel, metal wipers are used to protect the sealing lips of carriages and additional wipers against hot swarf. Large and loose dirt particles are pushed away and cannot get stuck due to the large radial gap with the guide rail. Specially adapted types are available for guide rails using AMS measuring systems.
The metal wipers are usually used when combined with additional wipers made of NBR or Viton.
The metal wiper is available for all MR and BM carriage types. The order code is "ABM xx" for BM carriages and "ASM xx" for MR carriages, where "xx" stands for the size.

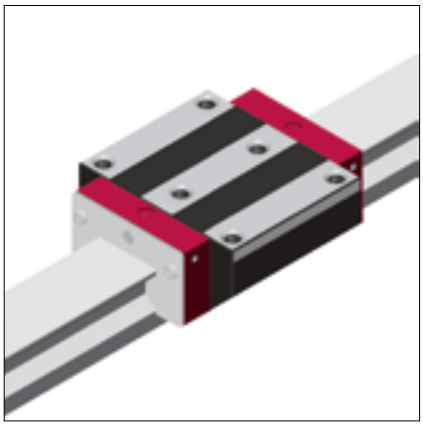

Carriages with metal wipers

Metal wipers and additional wipers can be combined. It is also possible to combine them with the lubrication plate SPL.
For a retrofit order, the additional wipers are supplied together with the required screws. Particularly when loosening the fastening screws in the front plate, the guidelines in the installation instructions and those in Section 9.3 - Wipers should be noted.

4.14.3 Bellows

Bellows are mainly used as an additional form of protection for carriages against dust and splashes of water.
They are offered for the MONORAIL MR roller guideways and for the MONORAIL BM ball guideway in one standard design. The bellows are made of synthetic fabric coated on both sides with plastic. It is extended over the full length of the guide rail, its cross-section matches the respective front plate on the carriage.
For special applications, e.g. in laser cutting or welding systems on request a version in heat-resistant material is also available.
It is fastened simply using special plates, which are screwed on to the guide rail ends or to the carriage front plate. The bellows are fastened by two rivets to both the adapter plate and the end plate.
Retro-fitting is only recommended for inductively hardened guide rails as holes need to be drilled into the end of the guide rail for attaching the end plate.
The order code is "FBB" for all BM carriages of size 20-45 and "FBM" for all MR carriages of size 25-65.

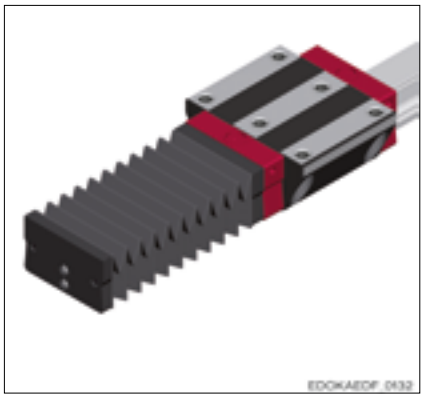

Carriages with bellows

Caution

Component damage due to improper construction

➡ When using bellows it is important to ensure that no dirt can be sucked under the bellows due to any vacuum that may occur when in motion.

Calculating lengths

Total length of carriages with LB adapter plates

Rail with one carriage

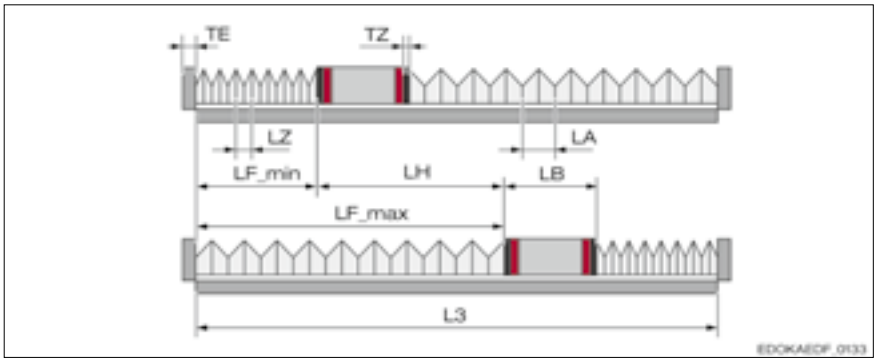

Lengths of one guide rail with one carriage:

LB	Overall length with adapter plates	LA	Extension per fold of the bellows
LH	Stroke	TE	Thickness of the end plate
LF_min	Compression of the bellows	LZ	Compression of the fold of the bellows
LF_max	Extended length of the bellows	TZ	Thickness of the adapter plate
L3	Guide rail length		

$$LB = L + 2 \cdot TZ$$

EDOKAEDF_0134

LB Overall length with adapter plates
L Total carriage length
TZ Thickness of the adapter plate

Rail with two carriages

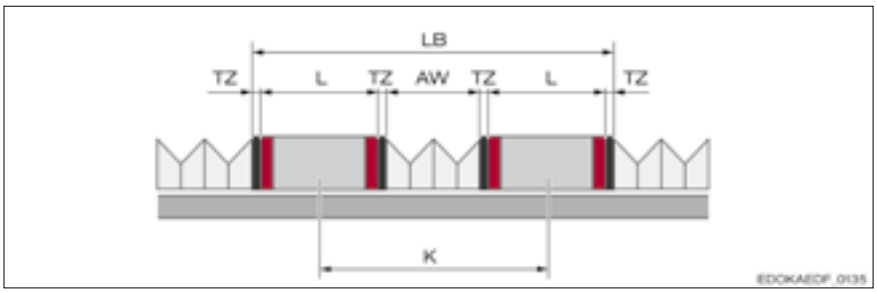

Lengths of one guide rail with two carriages and bellows:

LB	Overall length with adapter plates	W	Carriage spacing longitudinally
AW	Clear width between the carriages	TZ	Thickness of the adapter plate
L	Total carriage length		

$$LB = K + L + 2 \cdot TZ$$

EDOKAEDF_0136

LB Overall length with adapter plates
K Carriage spacing
L Total carriage length
TZ Thickness of the adapter plate

Number of folds per bellows n

Between carriages and guide rail ends

$$n = LH / (LA - LZ)$$

EDOKAEDF_0137

n Number of folds per bellows (n rounded to whole number)
LH Stroke
LZ Compression of the fold of the bellows
LA Extension per fold of the bellows

Between two carriages

$$n = AW / (0{,}9 \cdot LA)$$

EDOKAEDF_0138

n Number of folds per bellows (n rounded to whole number)
AW Clear width between the carriages
LA Extension per fold of the bellows

Guide rail length L3

$$L3 = LF_min + LF_max + LB$$

EDOKAEDF_0141

LF_min Compression of the bellows
LF_max Extended length of the bellows
LB Overall length with adapter plates

where

$$LF_min = n \cdot LZ + 10\ mm$$

EDOKAEDF_0139

LF_min Compression of the bellows
n Number of folds per bellows (n rounded to whole number)
LZ Compression of the fold of the bellows

$$+\ LF_max = LH \cdot LF_min$$

EDOKAEDF_0140

LF_max Extended length of the bellows
LH Stroke
LF_min Compression of the bellows

Size*	MR 25	MR 35	MR 45	MR 55	MR 65
LA	13	20	22	28	35
LZ	2.5	2.5	2.5	2.5	2.5
TE	8	8	8	8	8
TZ	12	10	10	10	10

Size*	BM 20	BM 25	BM 30	BM 35	BM 45
LA	12	12	15	20	22
LZ	2	2.7	2.7	2.7	2.7
TE	8	8	8	8	8
TZ	10	10	10	10	10

Note: * Dimensions in mm,
LA = Extension per fold of the bellows, LZ = compression of the folds in the bellows, TE = thickness of the end plate, TZ = thickness of the adapter plate

Dimensions

ZPB/ZPL adapter plate

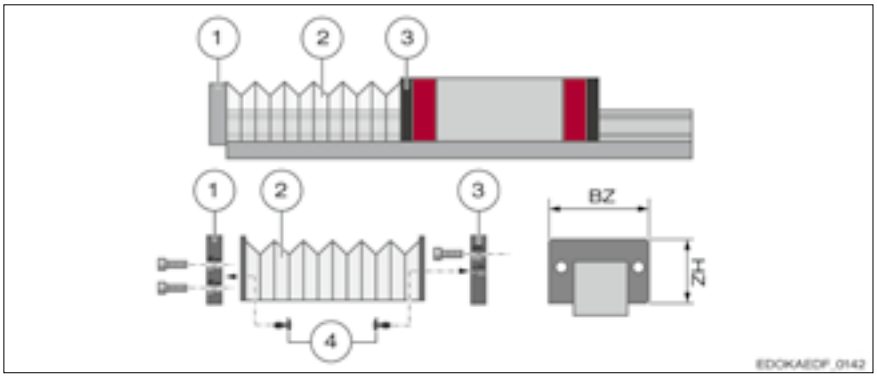

Dimensions of guide rail with carriage, bellows and adapter plate:

1	EPB/EPL end plate	BZ	Width of the adapter plate
2	FBB/FBM bellows	HZ	Height of the adapter plate
3	ZPB/ZPL adapter plate		
4	Rivets (4x)		

EPB/EPL end plate

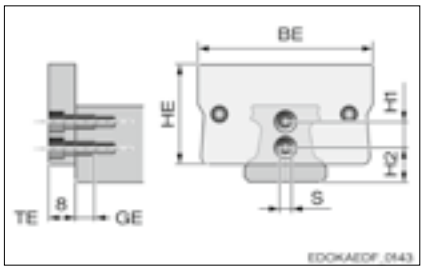

Dimensions and front fixing holes in the guide rail

BE Width of the EPB/EPL end plate
HE Height of the EPB/EPL end plate
TE Thickness of the end plate (8 mm)
GE Thread depth
S Screw diameter
H3 Height of fixing hole 1/fixing hole 2
H4 Height of guide rail supporting surface/fixing hole 1

Size*	MR 25, FBM 25	MR 35, FBM 35	MR 45, FBM 45	MR 55, FBM 55	MR 65, FBM 65			
BE	47	68	84	98	123			
BZ	47	68	84	98	123			
HE	30	40	50	57	76			
HZ	29	39.5	49.5	56.5	75.5			
H1	10	12	15	20	22			
H2	10.5	14	17	20	25			
S x GE	M4 x 5	M4 x 5	M6 x 8.5	M6 x 8.5	M6 x 8.5			
Size*	**BM 20, FBB 20**	**BM 25, FBB 25**	**BM 30, FBB 30**	**BM 35, FBB 35**	**BM 45, FBB 45**			
BE	43	47	58.5	68	84			
BZ	43	47	58.5	68	84			
HE	25	30	35	40	50			
HZ	25	30	35	39.5	49.5			
H1	6.5	8	8	10.5	13.5			
H2	8.5	10	12	13	16.7			
S x GE	M3 x 12	M4 x 8	M4 x 8	M4 x 8	M6 x 10			

Note: * Dimensions in mm,
BE = width of the end plate, BZ = width of the adapter plate, HE = height of the end plate, HZ = height of the adapter plate, H1 - height of fixing hole 1/fixing hole 2, H2 = height of guide rail supporting surface/fixing hole 1, S = screw diameter,
GE = thread depth

4.14.4 Application of sealing systems

The following figure provides an overview of the different types of seals, their characteristics and their potential uses:

Product Overview: Seals

Operating conditions	without cross wiper	Smooth-running wiper[1]	Standard wiper	Additional wiper (NBR)	Additional wiper (Viton)	Metal wipers	Bellows
	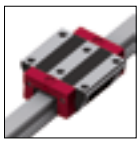	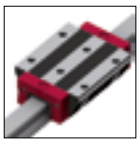	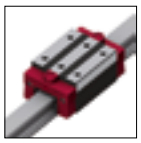	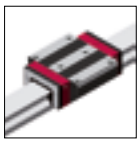		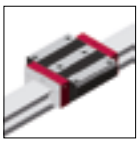	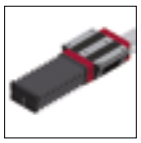
Order code	Q0 (only BM)	QL (only BM)	QN	ZCN (MR), ZBN (BM)	ZCV (MR), ZBV (BM)	ASM (MR), ABM (BM)	FBB (BM), FBM (MR 25-65)
Cleanroom	•						
Minimal contamination		•					•
Normal contamination			•				
Heavy contamination				•	•		
Dust			(•)	•	•		•
Coarse, hot swarf						•	
Splashes of water			(•)	•	•		•
Chemicals, coolant					•		
Minimal push forces	•	•				•	

Note: • = applicable, [1] not for MONORAIL MR

4.15.1 Coatings

SCHNEEBERGER offers a variety of surface coatings with anti-corrosive properties for its MONORAIL MR, BM and AMS products. The various procedures are set out in more detail below with their characteristics and fields of application.
For information about the availability of individual products, please contact SCHNEEBERGER.
Coating options:

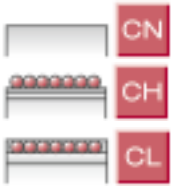

No CN coating

CH coating

CL coating, on request

CH coating

The CH coating is an electroplated hard chromium thin film. Due to the special processing technology a micro pearl structure with excellent adhesion and good sliding properties is created. The pure chromium layer, in a molecular bond with the substrate, has a high level of hardness, high resistance to wear and excellent corrosion protection characteristics. No structural changes in the base material occur due to the low process temperature of below 70°C. The matt grey chromium layer is in part able to store lubricant thanks to its pearl-like surface structure and thus has advantages in terms of mixed friction behaviour compared to non-coated products. The coating does not contain any levels of chromium-VI and is licensed for use in the food industry, where stringent requirements in respect of resistance to corrosion and wear are stipulated.

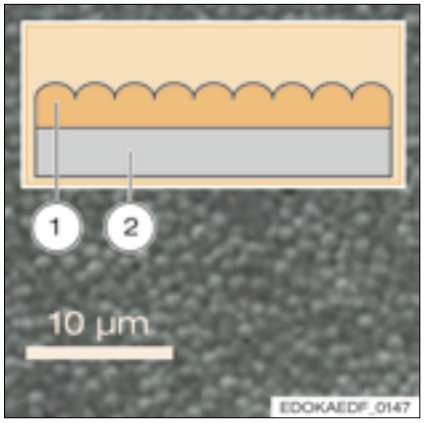

1 Cr layer
2 Base material

Characteristics
- High surface hardness (1200-1400 HV)
- High corrosion-resistance
- Coating thickness 2 - 5 µm
- Emergency running characteristics in case of mixed friction
- No effect on load carrying capacity
- Low influence on friction values
- Edge processing
- Fixing holes/Undercuts uncoated
- Colour: matt, light grey

CL coating

CL coating is an electroplated thin-film hard chrome plating. It also has a surface with a fine pearl structure and excellent adhesion as well as very good sliding properties. The pearl structure is covered with a mixed oxide layer as part of an additional process and the cavities are filled. This enhanced chrome coating has an even higher wear resistance, very high corrosion resistance and extremely low friction values. Due to the low process temperature no loss of hardness or distortion in the coated base material occurs. The black gloss chrome coating has advantages over and above its fine decorative appearance in case of inadequate lubrication and as a result achieves significantly higher running performance compared with CH coating. The coating does not contain any levels of chromium-VI.

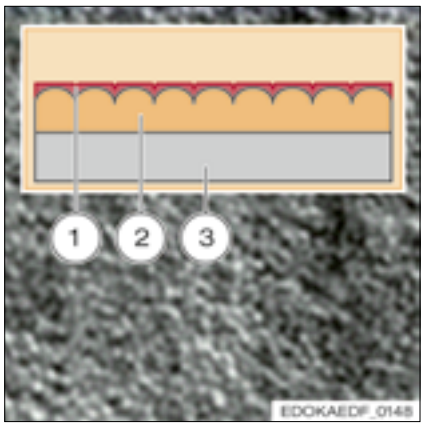

1 Cr Oxide layer
2 Cr layer
3 Base material

Characteristics
- High surface hardness (1200-1400 HV)
- High corrosion-resistance
- Coating thickness 4 - 6 µm
- Emergency running characteristics in case of mixed friction
- No effect on load carrying capacity
- Low influence on friction values
- Edge processing
- Fixing holes/Undercuts uncoated
- Colour: black, gloss

Overview of coating types

Coating	CH	CL
Colour	matt, light grey	black, glossy
Film thickness	2-5 µm	4-6 µm
Film hardness	up to 1400 HV	up to 1400 HV
Process	Chromium separation electroplating	Chromium separation electroplating, Chromium oxide layer
Maximum length	4000 mm	4000 mm
Chromium VI	no	no
Corrosion protection	excellent	excellent
Wear-protection	good for mixed friction	excellent for mixed friction
edge processing	yes	yes
Corrosion-protection of fixing holes, under-cuts	no	no
Applications	Mechanical engineering with stringent requirements, cleanroom technology, food industry, medical technology	Mechanical engineering with stringent requirements, decorative purposes, minimum quantities of lubrication

4.15.2 MONORAIL BM in its stainless steel model (WR, SR)

Linear guideways made of non-corrosive steel

SCHNEEBERGER MONORAIL BM WR/SR have been specially developed for requirements, for which standard coatings for linear guideways have reached their limits. This is always the case when the emission of particles is unwanted in processes or the performance of products is affected by corrosion.
Advantageous applications are
- Machines for the food industry
- Medical technology
- Cleanroom or vacuum applications
- Chemical processes
- Outdoor applications

In such applications, the MONORAIL BM WR/SR products are capable of error-free, clean, precise and extended operation of linear axles.

Construction of the MONORAIL BM WR carriage

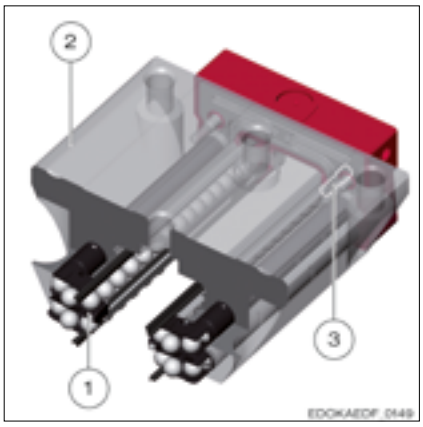

1 Balls
2 Body
3 Stainless steel screws

Carriage structure

The bodies (2) of SCHNEEBERGER MONORAIL BM WR carriages are made out of austenitic steel containing chromium. Only hardened stainless steel is used for the balls (1). Front plates and accessories are fastened with stainless steel screws (3).

Construction of the MONORAIL BM SR guide rail

The guide rail consists of stainless steel with a high level of chromium and is hardened using the hardening process at Rockwell C 56-58. The tracks and the entire surface of the guide rail are hard.
If longer axes are to be built, the MONORAIL BM SR guide rails with specially manufactured butt joints can be supplied.
Process optimisations are currently being undertaken on the maximum length of guide rails.

Restriction to other products

Set out below are the differences between MONORAIL BM and MONORAIL BM WR/SR:

- The guide rails are delivered without corrosion protection.
- In the case of the BM WR products only the lubricating option S99 is offered as assembly with stainless steel lube nipples leads to increase delivery times.
- The tapped fixing holes of the lube connections are closed with stainless steel grub screws.
- Preload classes greater than V3 are not available.
- The G0 accuracy class can only be offered on request.
- The loading capacity is reduced compared with the standard products.

Features

The external dimensions are exactly the same as the corresponding BM product, similarly all accessory components such as additional wipers, metal wipers or lubrication plates can be used.

Stainless steel fastening screws are used for all components. Plastic plugs are offered for closing the guide rail fixing holes.
The maximum single-piece guide rail length is limited to 3000 mm. Finishing the butt joint of the guide rails is possible.
See the SCHNEEBERGER MONORAIL and AMS product catalogue for the order descriptions of the product model.

Delivered condition

The guide rails are delivered without corrosion protection on their surface. The carriages are supplied with lubricant to guarantee reliable installation.
Carriage accessories from the standard program:
The accessories product range (additional wipers, metal wipers, lubrication plates) from the product catalogue can be used for the sizes and model variants specified above.

Product overview of BM SR guide rails

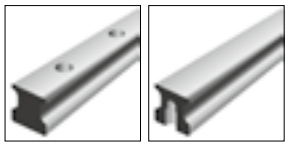

Sizes/rail types	ND standard	NUD screwable from below
Size 15	BM SR 15-ND	BM SR 15-NUD
Size 20	BM SR 20-ND	BM SR 20-NUD
Size 25	BM SR 25-ND	BM SR 25-NUD
Size 35	BM SR 35-ND	BM SR 35-NUD
Special characteristics		
attaching from above	•	
attaching from below		•

Product overview of BM WR carriages

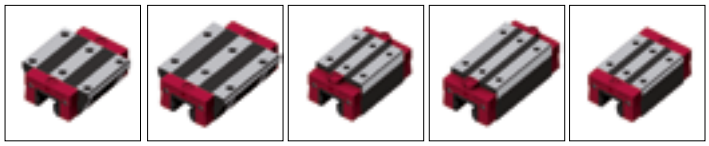

Sizes/rail types	A standard	B standard, long	C compact, high	D compact, high, long	F compact, flat
Size 15	BM WR 15-A		BM WR 15-C		BM WR 15-F
Size 20	BM WR 20-A	BM WR 20-B	BM WR 20-C	BM WR 20-D	
Size 25	BM WR 25-A	BM WR 25-B	BM WR 25-C	BM WR 25-D	
Size 35	BM WR 35-A	BM WR 35-B	BM WR 35-C	BM WR 35-D	
Special characteristics					
attaching from above	•	•	•	•	•
attaching from below	•	•			
for medium forces	•		•		
for high forces		•		•	

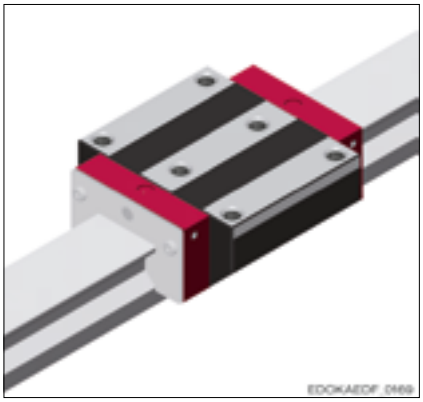

Carriages with additional wipers ABM

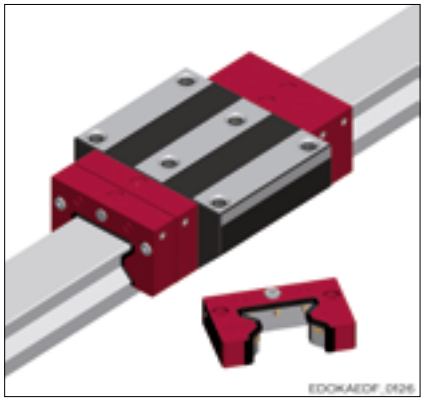

Carriages with lubrication plate SPL

4.16.1 Clamping and braking components - construction and areas of use

SCHNEEBERGER offers clamping and braking components for MR and BM MONORAIL guideways. Typical areas of use for these components are:

- Securing the position of linear axles to relieve the load on the drive
- Clamping machine tables to accept axial forces during processing
- Securing vertical axes when stationary
- Transportation lock for axes
- Braking and securing linear motor axes in case of power failure

Clamping and braking components are built in a similar way to the carriages in SCHNEEBERGER MONORAIL guideways. They consist of a body, which is screwed on to the machine table and surrounds the guide rail profile. Instead of the rolling elements, radial moving clamping jaws are positioned on both sides of the guide rail, which upon activation rest against the guide rail in the cavity between the tracks and clamp or brake the axis. Individual types for guide rails with AM measuring system use the guide rail collar as a contact surface.
In their disengaged stated, there is no contact between guide rail and clamping components, the clamping components do not therefore perform any guiding function.
There are narrow and wide types, the main dimensions of the components are mainly based upon DIN 645 and thus correspond with carriage cross sections.
The activation of the clamping pads occurs either by synchronously switched two-sided plunging components or by one individual plunging component with a floating bearing. In each case it guarantees that the clamping motion exerts minimal or no transverse forces on the connecting structure.

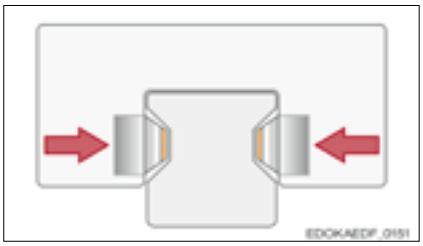

Contact surface area between tracks.
Not suitable for guide rails with AMS!

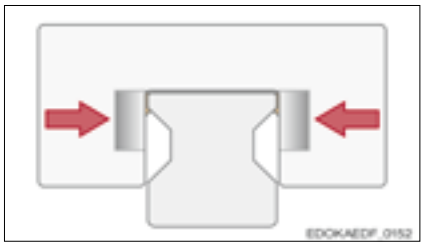

Contact surface area against guide rail collar.
Suitable for guide rails with AMS!

4.16.2 Types of clamping and braking components

There are various types of stabilizing components, which are different in terms of function, their method for generating pressure and in their effect.

Function

According to their function a distinction is made between clamping components and braking components. Clamping components are used to safeguard idle machine axes. Braking elements are able to brake axes out of a motion. For this purpose they have special slideway coatings, which are designed so that the guide rail is not damaged.

Caution

Component damage due to failure of the braking system

➡ Brake components are designed for emergency stop situations and may not be used as an operational brake!

Pressure medium

A distinction is made depending on the method for generating pressure.

- Manual
- Pneumatic
- Hydraulic and
- Electric

Clamping and braking components

Effect

There are both active ones, that is components acting by applying pressure, and passive ones, in which case their retaining force is made effective with a drop in pressure. For these components the retaining force is generated by means of an integral spring energy store. The pressure medium is used to release the retaining force or can be used in components with a so-called plus connection combined with the spring energy store to boost its retaining force.

4.16.3 Overview of types

The following figures provide an overview of the different types, their characteristics and use:

Product overview		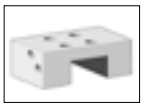			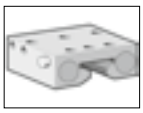	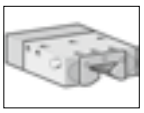	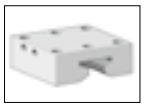	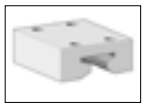
Series	**HK**	**MK**	**MKS**	**MBPS**	**BWPS**	**TKPS**	**UBPS**	**LBPS**
Pressure medium manual	•							
pneumatic		•	•	•	•	•	•	•
hydraulic								
electric								
Spring energy store			•	•	•	•	•	•
PLUS connection			•		•	•	•	
Brake component				•	•	•	•	•
DIN 645-compatible					•	•	•	
Type of guideway MR roller	•	•	•	•	•	•	•	•
MR with AMS	•	•	•					
BM ball	•	•	•					

Note: • = applicable
Order code: Series xx, where xx = size (e.g. "MKS xx")

Product overview								
Series	**KWH**	**KBH**	**KBHS**	**MKE**				
Pressure medium manual								
pneumatic								
hydraulic	•	•	•					
electric				•				
Spring energy store			•					
PLUS connection								
Brake component		•	•					
DIN 645-compatible	•	•						
Type of guideway MR roller	•	•	•	•				
MR with AMS								
BM ball				•				

Note: • = applicable
Order code: Series xx, where xx = size (e.g. "MKS xx")

4.17.1 SCHNEEBERGER Downloads

In order to assist the development and design in the CAD-environment, all MONO-RAIL-components are available for download as 2-D or 3-D models in all common data formats from www.schneeberger.com. This provides an opportunity to configure an individual system with all the accessory components and the compatible guide rail lengths and carriage types and to import them into a surrounding structure.

4.17.2 On-line CAD catalogue

Using the CADENAS part server you have an opportunity to download the large number of CAD-neutral 2D/3D geometric data on the SCHNEEBERGER products from www.partserver.de.

All available CAD components have been created with great care. The company SCHNEEBERGER does not accept any liability for erroneous components or incomplete geometries or the ensuing consequences. Technical data is subject to change without notice.

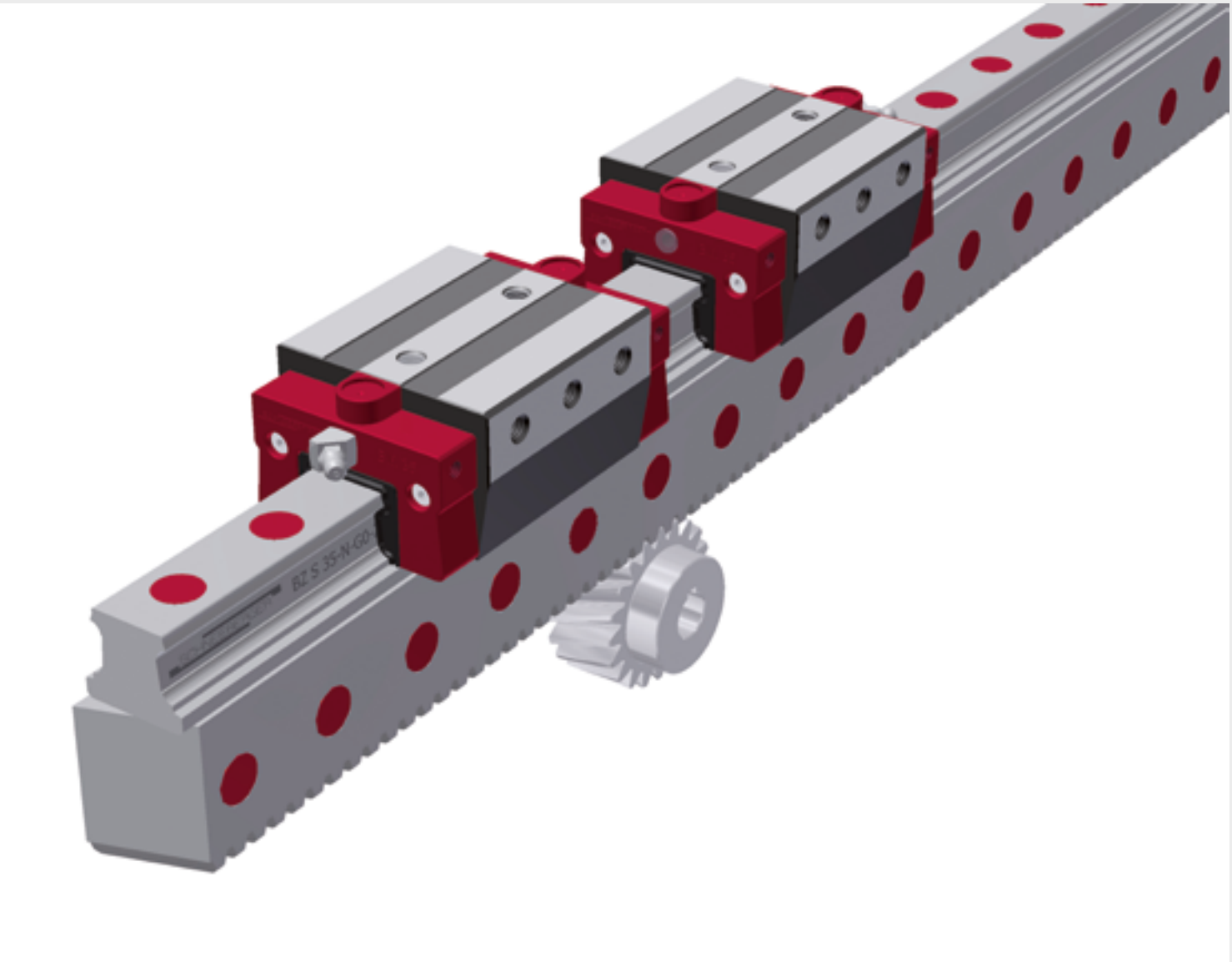

SCHNEEBERGER
LINEAR TECHNOLOGY

5	**Development and design: Driving**	**169**
5.1	**Product overview**	**172**
5.1.1	Characteristics and advantages	172
5.1.2	Installation orientation	174
5.2	**Calculation and sizing**	**175**
5.2.1	Carriage and guide rail	175
5.2.2	Gear rack	177
5.3	**Attaching the guide rail**	**180**
5.3.1	Fastening method	180
5.3.2	Closures for fixing holes	180
5.3.3	Permissible screw tightening torques	181
5.3.4	Transport protection including assembly fixture	181
5.4	**Multi-part guide rails**	**183**
5.4.1	Butt transition joint	183
5.4.2	Design	183
5.4.3	Alignment	183
5.4.4	Replaceability	183
5.5	**Configuration of the connecting structure**	**184**
5.5.1	Lateral locating surfaces	184
5.5.2	Installation methods	185
5.5.3	Geometrical and position accuracy of the supporting surfaces, connection dimensions	186
5.6	**Lubrication**	**187**
5.6.1	Delivered condition in terms of protection	187
5.6.2	Initial lubrication and subsequent lubrication	187
5.6.3	Coatings	188

5.1.1 Characteristics and advantages

The gearrack MONORAIL BZ systems from SCHNEEBERGER combine the characteristic performance of the SCHNEEBERGER MONORAIL BM guideways with the advantages of a high-precision, integral rack drive.

Rack drive with two carriages

The system offers the following advantages for customers:

- One-piece system lengths up to 6,000 mm
- Multi-part systems > 6,000 mm
- High-quality gear rack (hardened and ground)
- Cost saving of up to 25% due to the reduced overheads for design, manufacturing and installation
- Outstanding running characteristics, high load carrying capacity and extended service life based on the SCHNEEBERGER MONORAIL BM guideways
- Focus on customer requirements thanks to a wide range of carriage types, extensive accessories and the use of different qualities of gear rack

Furthermore the MONORAIL BZ distinguishes itself with the following characteristics:

- Can be butt-jointed due to its specially developed transition geometry
- Combination of functions for guiding, driving and measuring in a single system
- Transmission of high lateral forces
  - Double the number of fastening screws between the system and its substructure and between the rack and guide rail
  - Fairly large system height with more favourable lever ratios
- Reduced handling and installation overheads as the transport fixtures can be used for installing the system
- Interchangeability of individual rack segments (e.g. on sections subject to intensive wear)

One-piece system lengths up to 6,000 mm
Precise, gap-free running of the carriage over large distances with the one-piece system lengths of up to 6,000 mm. By linking together multiple BZ systems larger travel distances can also be achieved whilst ensuring consistent quality.

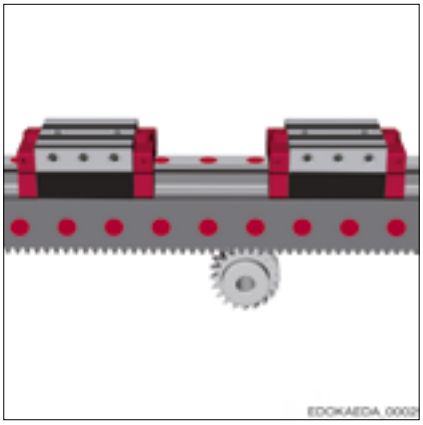

BZ systems with rack drive

Gearing to quality 6
The ground and hardened rack to quality 6 supports an accurate running with maximum transmission of force, high levels of positioning accuracy and extended service life. Other qualities and designs are available.

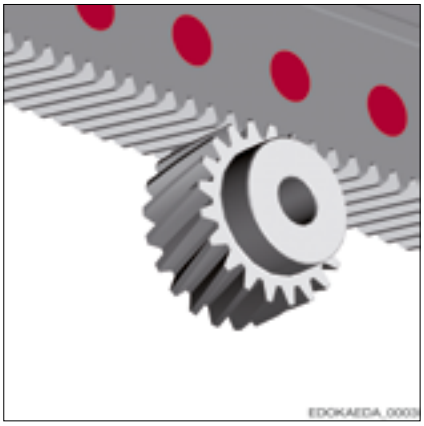

Rack with pinion

5.1.2 Installation orientation

The installation orientation of the guideways is based on the application, that is on the functionality of the machine, its construction and the direction of travel of the axis. It affects the method of supplying lubricant and the susceptibility to contamination of the guideway.This machine concept, as illustrated by way of example in the following figure:

Variant 1*

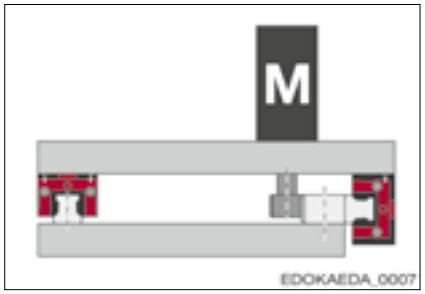

Features:

- Horizontal axis
- BZ guide rail horizontal, rotated by 90°
- BZ guide rail with carriage type E with side attachment
- Rail with carriage type C/D, which means that in each case Location surfaces for the guide rails and carriages they are on the same level

Note: * M = Motor with gears and pinion

Variant 2*

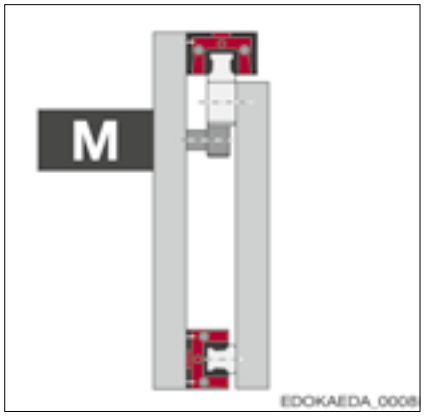

Features:

- hanging installation
- horizontal movement
- BZ guide rail vertical, which means that the gear rack it properly protected against dirt
- BZ guide rail with carriage type E with side attachment
- Parallel rail with carriage type C/D, which means that in each case Location surfaces for the two guide rails and carriages they are on the same level

Note: * M = Motor with gears and pinion

Variant 3*

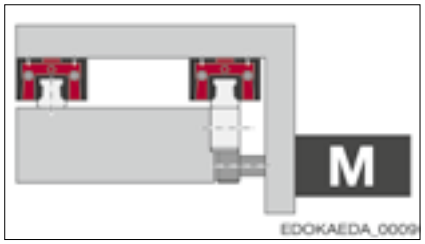

Features:

- Horizontal axis
- BZ guide rail vertical, which means that the gear rack it properly protected against dirt
- Parallel standard rail with cross section such as BZ, but without gear rack
- BZ and standard rail with the same cross-section, consequently good accessibility, simple installation
- Motor attachment from the side, which means maximum free room on the upper side of the carriage

Note: * M = Motor with gears and pinion

Variant 4*

Features:

- Hanging installation
- Horizontal movement
- Carriage type C/D with attachment from above and 6 screws for a high level of rigidity
- Motor attachment from the side, which means maximum free room on the upper side of the carriage

Note: * M = Motor with gears and pinion

5.2.1 Carriage and guide rail

When designing the SCHNEEBERGER MONORAIL BZ guideways with rack drive, the following should be noted:

Load capacities and loading capacity

The guide rail with carriage is no different from a standard guideway in terms of its design. The load capacities of MONORAIL BM are in accordance with the SCHNEEBERGER MONORAIL and AMS product catalogue.
In the case of MONORAIL BZ, however, it should be noted that the total loading capacity of the system is restricted compared with MONORAIL BM. The reason for this is the high load on the lateral screw connection due to the leverage of the guide rail under lateral forces, the friction locking of the internal screw connection between the guide rail and the rack and the minimal contact surface area with the gear rack.
The values from the table set out below based on a screw connection with screws of strength grade 12.9 apply for the permissible lateral load ± F_Y and the permissible tensile and compressive load ± F_Z. The values are applicable per carriage.

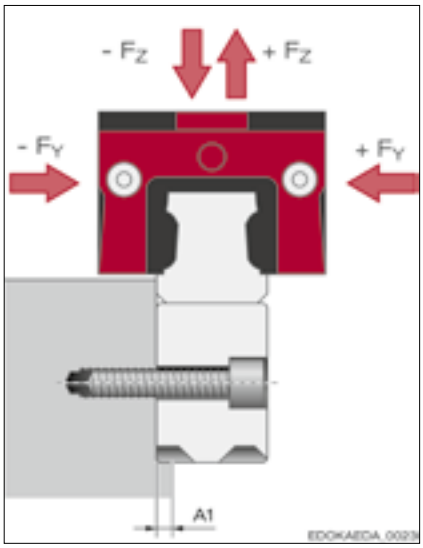

A1 max. 3 (BZ 25) or max. 5 (BZ 35)

Effect of tensile, compression and lateral forces

Maximum tensile, compression and lateral forces (N)

Size/carriage type	$+F_Y$ (N)	$-F_Y$ (N)	$+F_Z$ (N)	$-F_Z$ (N)
BZ 25				
A/C/E	5275	1840	3060	8651
B/D	6375	2200	3060	10455
BZ 35				
A/C/E	9675	3600	5580	24381
B/D	11675	4290	5580	29421

It is important to note in the design that the transmittable forces cannot be limited by the characteristic values of the carriages, but by the connection with the structure.

Service life

In the case of table systems with rack drive, additional forces occurs at the meshing of the teeth orthogonally to the direction of movement. These are transmitted via the pinion, motor and slideway to the guideway and must be taken into consideration when calculating service life.
As a result of the helical gearing, when driving laterally to the guide rail longitudinal axis, forces F_y occur, where $F_y = 0.35 \cdot F_x$. The value 0.35 is produced from the helix angle β = 19°31'42" of the gearing. The force is constant with a constant drive force. Its direction reverses with the direction of acceleration (change from acceleration to braking).
Otherwise forces F_z occur vertically to the gear rack and indeed pointing away from the gear rack where $F_z = 0.36 \cdot F_x$ due to the pressure angle of the tooth flanks of approximately 20°. This force swells. $F_z \approx 2/3$ of F_{z_max} should be applied as a guideline for the service life calculation.

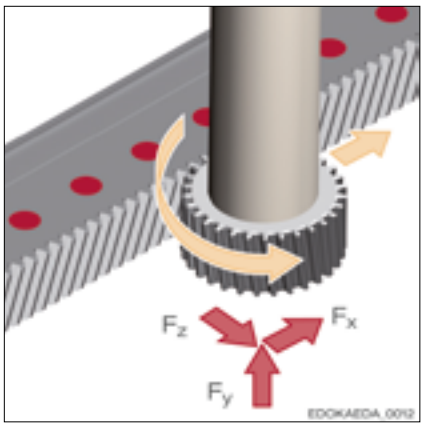

F_x Force in the x-direction
F_y Force in the y-direction
F_z Force in the z-direction

Forces on the gear rack

Application of force when using a type E carriage

When using type E carriages, the type of direction of force should be observed. As a result of the lateral connection of carriages on the axis slides, torques can occur, which lead to internal additional forces, which can drastically reduce service life.

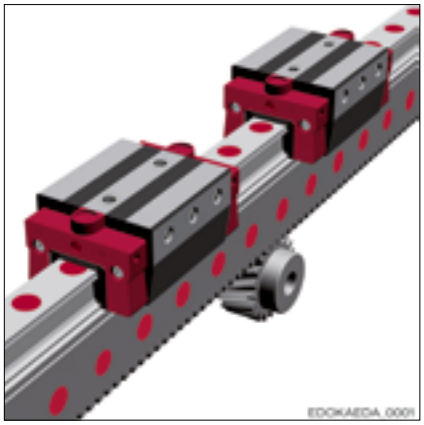

Rack drive with two type E carriages

5.2.2 Gear rack

The calculation principles set out below are used for a rough estimate of the possible load and service life of the rack drive. For an exact design, however, a detailed calculation is required, which can be requested from SCHNEEBERGER as required.

Loading of rack and pinion

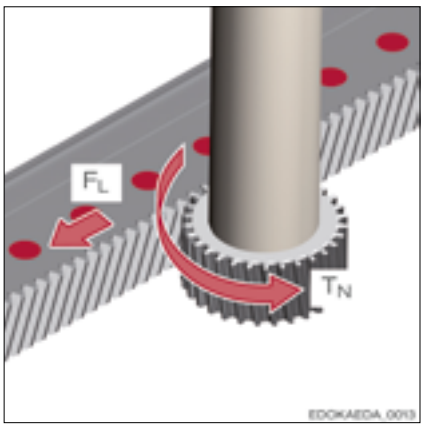

Rack with longitudinal force F_L and pinion with torque T_N

The table provides an overview of the maximum force F_L and the max. torque T_N depending on size and rack design of the MONORAIL BZ, the number of teeth z in the pinion and the change in load number.
The specified values are valid with effective lubrication, smooth operation and stable bearings.
A safety factor for tooth root stress $S_F \geq 1{,}4$ and a safety factor for tooth flank stress $S_H \geq 1{,}0$ are factored into the equation.
A safety factor of $S_B \approx 1.0 - 4.0$ for the operating conditions (angle error, inadequate lubrication, dirt, ...) needs to be taken into account based on experience.
Depending on the application we recommend using the values for 10^6 or 10^7 change in load. Values for 10^5 are only to be used in exceptional circumstances, e.g. for static loads, and in collaboration with SCHNEEBERGER.
The number of changes in load applied is determined as follows:
If the number of teeth in the rack section that is mainly used is more than ten times the number of teeth z in the pinion, then it is possible to design with 10^6 otherwise you should design assuming 10^7 changes in load.

Number of changes in load		10^5	10^5	10^6	10^6	10^7	10^7
	Pinion tooth count z	T_N (Nm)	F_L (N)	T_N (Nm)	F_L (N)	T_N (Nm)	F_L (N)
Rack type and design							
BZ 25							
soft	20	104	4895	34.2	1610	17.5	827
hardened	20	138	6500	132	6240	102	4800
soft	40	295	6900	132	3120	70	1600
hardened	40	281	6600	242	5700	181	4280
BZ 35							
soft	20	217	8180	73	2750	34	1280
hardened	20	285	10700	273	10300	214	8000
soft	42	627	11200	292	5240	183	3290
hardened	42	603	10800	522	9300	397	7130

Notes: F_L = Longitudinal force, T_N = Torque

Calculating forces and moments

$$F_{vs} = m \cdot g + m \cdot a + F_R$$

EDOKAEDA_0014

for vertical stroke axis
F_{vs} Push force (N)
m Mass moved (kg)
g Gravity = 9,81 m/s²
a Acceleration (m/s²)
F_R Frictional resistance (N)

$$F_{vs} = m \cdot a + F_R$$

EDOKAEDA_0015

for a horizontal travel axis
F_{vs} Push force (N)
m Mass moved (kg)
a Acceleration (m/s²)
F_R Frictional resistance (N)

$$a = v / t_b$$

EDOKAEDA_0016

a Acceleration (m/s²)
v Speed (m/s)
t_b Acceleration time (s)

$$F_R = \mu \cdot m \cdot g$$

EDOKAEDA_0017

F_R Frictional resistance (N)
μ Coefficient of friction
m Mass moved (kg)
g Gravity = 9,81 m/s²

$$M_{erf} = F_{vs} \cdot d / 2000$$

EDOKAEDA_0018

M_{erf} required torque
F_{vs} Push force (N)
d Reference diameter (mm)

$$M_{zul} = T_N / S_B$$

EDOKAEDA_0019

M_{erf} Permissible torque
T_N Torque (from table, previous page)
S_B Safety factor for operating conditions

The safety factor for the operating conditions (angle error, inadequate lubrication, dirt, ...) should be taken into consideration based on experience (S_B ≈ 1.0 – 4.0).

The following condition must be met:

$$M_{zul} > M_{erf}$$

EDOKAEDA_0020

M_{zul} Permissible torque
M_{erf} Required torque

SCHNEEBERGER calculation service
When required, SCHNEEBERGER will complete an exact design of the rack drive. The following details are required for this:

- Application
  - Description of application
- Requirements in respect of the drive
  - Small dimensions with high transmittable moments
  - Position accuracy
  - Smooth running
  - Number of changes in load per hour
- Operating data
  - Permanent operation or intermittent operation (start-ups/h)
  - Iddle time
  - Drive rotational speed
  - Type of drive rotational speed (variable, continuous)
  - Desired output rotational speed
  - Mass being moved
  - Desired speed of the mass being moved
  - Acceleration time
  - Type of rack drive installation
- Working environment
  - Environmental temperature
  - Humidity
- Configuration
  - Accessories
  - Motor attachment geometry
  - Type of output
  - Special modifications, dimensions or characteristics

5.3.1 Fastening method

The MONORAIL BZ guide rails are fastened to the connecting structure from the side. For this purpose they have lateral continuous holes with countersinking in the rack segments.

Fastening from the side

Advantages:

- Good accessibility of the fixing holes
- Gear rack isn't weakened by fixing holes

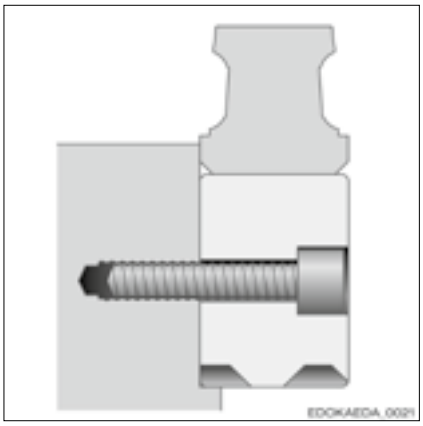

Fastening the BZ guide rail

5.3.2 Closures for fixing holes

The lateral fixing holes can be closed if required with plastic plugs BRK. However, this is not essential as the fixing holes are not located inside the carriage's area of movement. The fixing holes for the connecting screws between the guide rail and rack are also closed in the standard design in the factory with plastic plugs.
Instructions on installation can be found in the MONORAIL and AMS installation instructions.

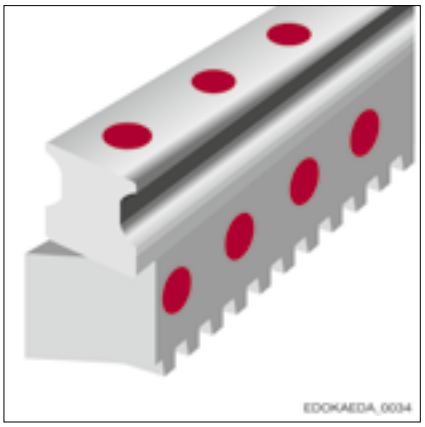

Fixing holes with plastic plugs

5.3.3 Permissible screw tightening torques

See the table below for the maximum tightening torques for fastening screws DIN 912 / ISO 4762. This is based on a friction coefficient as delivered of μ = 0.125.

Caution

Component damage due to screws not tightened using the correct torque

- ➡ The recommendations of the screw suppliers must be followed and are always binding.
- ➡ Screws with low head DIN 6912 are to be tightened according to strength grade 8.8

Tightening torques for DIN 912 / ISO 4762 fastening screws, μ = 0.125

Maximum tightening torque (Nm)								
Screw	**M6**	**M8**						
Size BZ	25	35						
Strength grade 8.8	10	24						
12.9	16	40						

A more uniform preload force is obtained when grease containing MoS_2 is applied to the guide rail fastening screws, which are then tightened with a torque wrench. This results in a marked improvement of running accuracy.

Caution

Component damage due to screws not tightened using the correct torque

- ➡ By using greases, especially greases containing MoS_2, the coefficient of friction μ can drop to half. The torques must be reduced accordingly.

The fastening screws can be secured if losses in tension are expected. SCHNEEBERGER recommends using fastening screws of strength grade 12.9.

5.3.4 Transport protection including assembly fixture

MONORAIL BZ guide rails, with a length > 1200 mm are delivered with a transport fixture. This consists of an aluminium L-profile section, which is connected via several clamps with the BZ guide rail. The L-profile section stabilises and protects the BZ system against buckling during storage, transportation and installation. The top of the profile section has several tapped fixing holes into which eyelets can be screwed for lifting with hoisting devices. BZ systems should always be transported in an upright position, that is with the gear rack pointing downwards, because the guide rails and the transport fixtures are more rigid in this orientation. The transport fixture should only be removed after the BZ guide rail has been fixed to the machine. Additional information can be found in the MONORAIL BZ installation instructions.

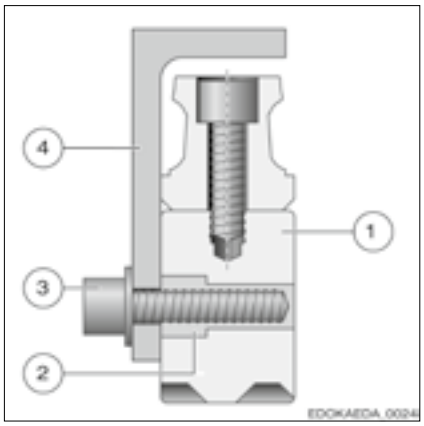

1 BZ system
2 Clamp
3 Screw
4 Transport fixture

Transport fixture for guide rail with rack

5.4.1 Butt transition joint

BZ systems with a length > 6 m are made up of several sections due to the limited length of the individual rails. By linking multiple segments theoretically any length can be achieved whereby rail butt joints and rack butt joints are installed offset as standard.

5.4.2 Design

The guide rail ends in the BZ systems are prepared and finished in the factory for the system joint so that carriages and wipers do not suffer any reductions in service life due to any gap that has formed.

5.4.3 Alignment

It is critical to pay attention to carefully installing the system joint with the machine bed. In general where possible joints should not be placed in heavily loaded and frequently travelled zones.
Two criteria are critical for the correct alignment of the systems at the joint:

- Alignment of the guide rails
- Correct rack spacing of racks with adjacent systems

The correct alignment of guide rails in vertical and horizontal orientations perpendicular to the system axis can be achieved using precise machine-side end stops and alignments using dial gauges. See MONORAIL and AMS installation instructions.
The systems must be aligned in the axial direction using the gear rack so that the pinion does not jam when rolling over the joint. To do this the spacing of the teeth must be set at the joint so that it corresponds with the spacing of the remaining racks and thus moves within the permissible individual pitch error of the adjacent rack. For this purpose for installation the BZM assembly fixture should be used, a short rack segment with counter gearing. After the guide rails have been orthogonally aligned, it is pulled into the gearing using a clamp and so the systems are axially aligned with one another. To do this at least one of the segments must be capable of axial alignment.

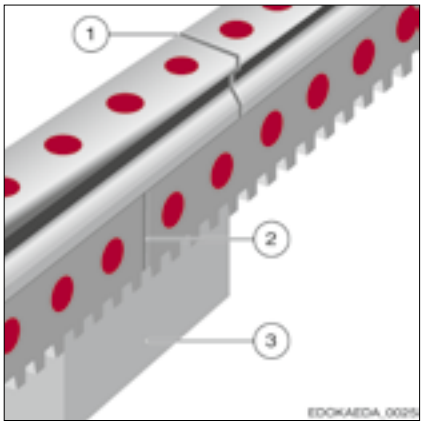

1 Guide rail joint: 0.01–0.03 mm
2 Rack joint: 0.2-0.3 mm
3 BZM assembly fixture

Installing multi-part guide rails

5.4.4 Replaceability

For replacement parts, multi-part BZ guide rails can only be replaced as complete units. A subsequent order of individual parts is not possible.

5.5.1 Lateral locating surfaces

For simple installation and precise alignment of the MONORAIL BZ guideway, the location surfaces of the guide rails and carriages should be fitted with lateral locating surfaces. In this way higher lateral forces can be transmitted to the carriages and/or compressive forces to the guide rail. See the permissible lateral force without locating surfaces, Section 5.4 - Attaching the guide rail and 4.13 - Fastening carriages.
Observance of the following height specifications for the locating surfaces guarantees secure absorption of force and sufficient free space for the carriages. The carriages and guide rails have a chamfer on the edges of the locating surfaces which means that the connecting structure can be designed without a relief groove. The specified corner radiuses are maximum values, which ensure that carriages and guide rails correctly lie adjacent to the location surfaces.

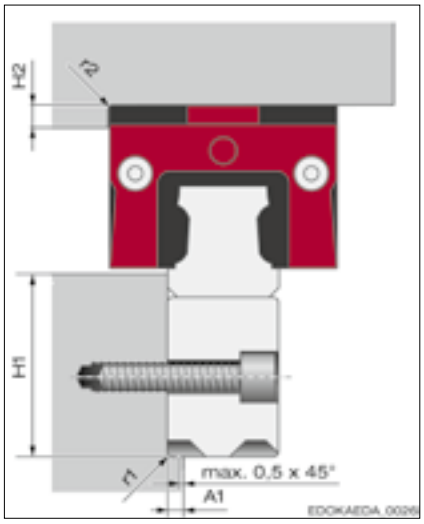

r1 Corner radius of guide rail edge
r2 Corner radius of carriage edge
H1 Locating height of the guide rail
H2 Locating height of the carriage
A1 Width of the guide rail system collar

Design of the connecting structure

Type	Size	A1*	H1_min*	H1_max	H2_min*	r1_max	r2_max
BZ	25	3.0	38.5	40	4.5	0.8	1.1
	35	5.0	54.5	56.5	6	1.3	1.3

Note: * Values A1, H1_min and H2_min are applicable for steel and cast steel with a limit of elasticity of at least 240 N/mm².

Note

➡ For smaller A1 values the maximum vertical load of the carriages is reduced. The screw layout is critical without the use of a locating collar.

5.5.2 Installation methods

Different criteria must be taken into consideration when choosing an appropriate installation method and defining the number and arrangement of the lateral locating surfaces for BZ systems. These are:

- Load
- Required accuracy
- Assembly effort
- Specific installation

Details on this can be found in Section 4.14 - Configuration of the connecting structure. Set out below some typical installation methods are described, which differ in terms of the number and orientation of the locating surfaces, the transmittable lateral forces and the complexity of installation and should serve as a design aid:

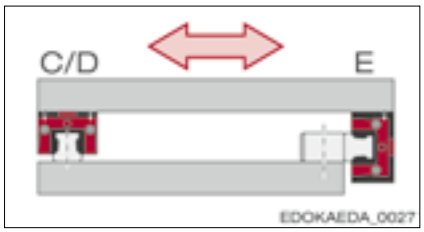

No locating surfaces

Features:

- Very simple configuration of the location surfaces
- High assembly effort
- Small absorption of force from the side, forces are transmitted by means of friction locking

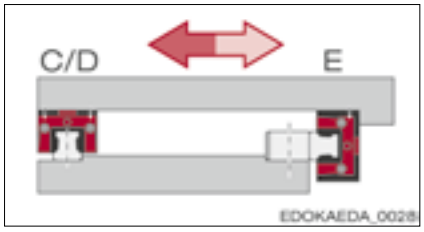

Both guide rails and carriages for BZ guide rail with a datum edge.

Features:

- Carriages on BZ guide rail with lateral fastening
- Simple configuration of the location surfaces
- Minimal assembly effort
- For high lateral forces from one direction, e.g. for hanging installation

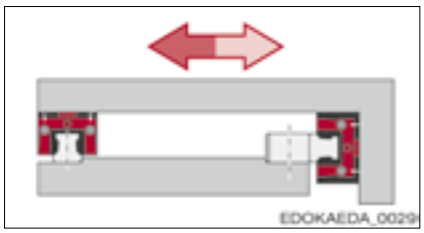

- Both guide rails and a carriage side with datum edge

Features:

- Carriages on BZ guide rail with fastening from above
- Complex configuration of slideways
- Simple installation
- For high lateral forces from one direction, e.g. for hanging installation

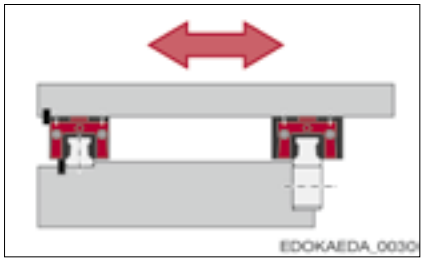

Both guide rails and a carriage side with a datum edge, a guide rail and its carriages also with side fastening

Features:

- Simple installation
- For high compressive forces and high lateral forces from both directions, e.g. for horizontal axes

5.5.3 Geometrical and position accuracy of the supporting surfaces, connection dimensions

Advantages of the SCHNEEBERGER MONORAIL BZ guideways can best be achieved when mounted to a rigid structure with a high level of geometric accuracy. Inaccuracies in the attachment surfaces are partially compensated for by the elastic deformation of the guideway, however, they may have a detrimental effect on overall accuracy, running behaviour, push force and service life as a result.
For MONORAIL BZ the same specifications apply as for MONORAIL. In Section 4.14 - Configuration of the connecting structure, the permissible values for

- height deviation laterally
- height deviation longitudinally
- tolerances of parallelism of the locating surfaces and
- evenness of the location surfaces

are defined. The surface quality of the supporting surface does not have a direct influence on the function and running behaviour of the guideway, but it does on the static accuracy. Carriages and guide rails are compressed against the location surfaces by the screw connections with a high level of force. To prevent settling behaviour of the connection, a high surface contact ratio is required. This is achieved by means of high level of surface quality. An average surface roughness of Ra 0.4 to 1.6 µm is recommended for the supporting and locating surfaces.

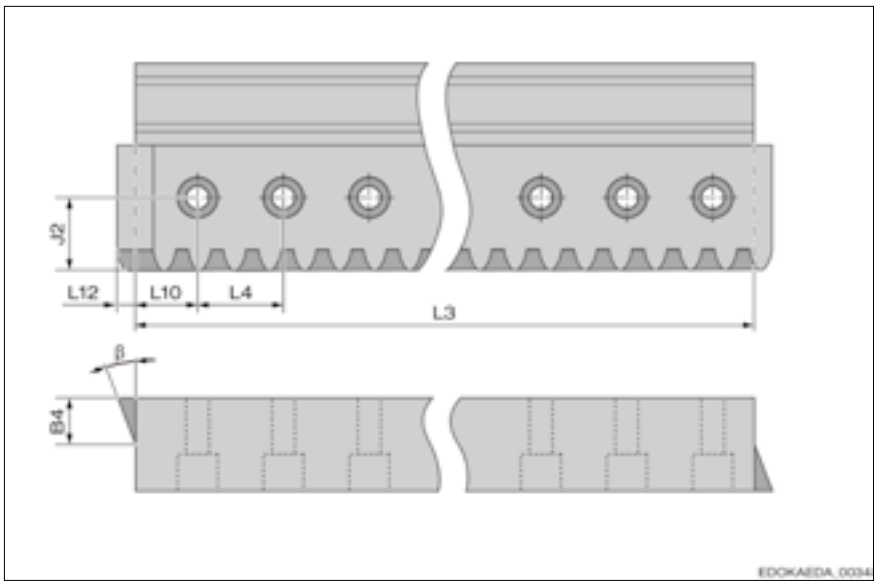

Connection dimensions of a BZ rail:

L3	Rail length	L12	Rack projection
L4	Fixing hole pitch	B4	Rack projection (half rail width)
L10	End fixing hole spacing	β	Helix angle

The values for the connection dimensions can be found in the MONORAIL and AMS product catalogue

5.6.1 Delivered condition in terms of protection

For shipping the MONORAIL BZ systems are protected with oil as standard. This serves as a means of protection during storage, transportation and installation.
Initial lubrication of the racks must be carried out prior to commissioning of the guideway.
More detailed information on preservation of the SCHNEEBERGER MONORAIL guideways can be found in Section 4.15 - Lubrication.

Lubrication used for protection:

A synthetic oil-based corrosion protection oil viscosity grade ISO VG 15 is used for protection, which does not harden. This ensures that the gearing does not have to be cleaned prior to installation.
SCHNEEBERGER preservatives are compatible with other mineral-oil-based lubricants. However, their compatibility must be checked with the lubricant being used.

5.6.2 Initial lubrication and subsequent lubrication

Before commissioning MONORAIL BZ systems, a base lubrication of the guideway and of the rack drive should be completed with oil or grease. To do this adequately moisten the rack and the drive pinions with lubricant either manually, e.g. using a brush, or automatically apply the lubricant using an attached felt pinion. The felt pinion meshes with the gearing of the rack and transfers the lubricant. In this way an even film of lubricant is applied. The supply of lubricant is made by the axis. Either a lube nipple or a stand-alone lubricant dispenser can be attached to this. This will provide you with automated lubrication. Supply of lubricant via the machine's centralised lubricating system is not usually considered as generally other lubricants with significantly higher viscosity are used for the rack drive than for the SCHNEEBERGER MONORAIL guideways. Fully soak the felt pinion (BZR) in lubricant before commissioning the automated lubrication.

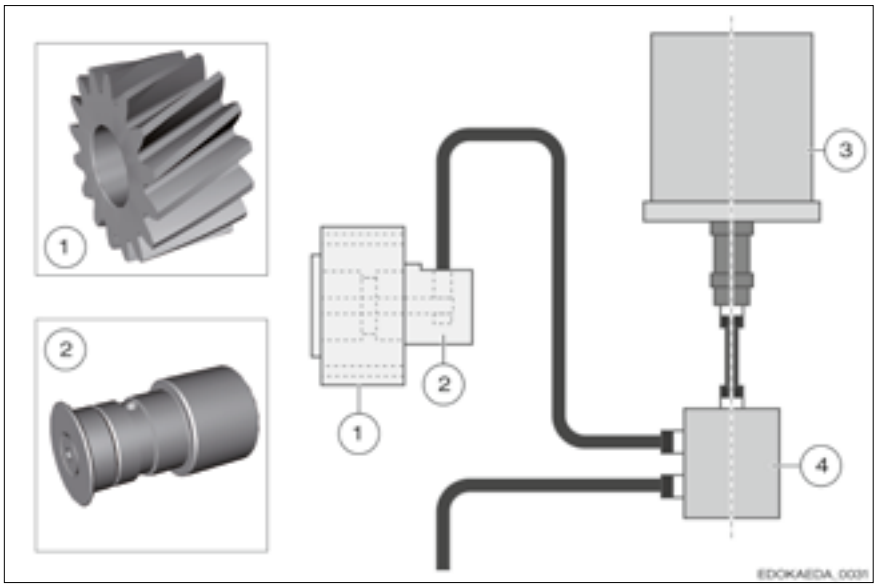

Stand-alone lubricant dispenser:

1 Lubricating pinion
2 Pinion hub for lubricating pinion
3 Lubrication pump
4 Lubricating distributor

To maintain operability of the rack drive in addition to an initial basic lubrication regular subsequent lubrication is generally also a requirement. Use the same lubricant as the one used for the initial lubrication and check compatibility with the base lubricant for subsequent lubrication.
The lubricating intervals can vary greatly depending on the application and must be determined during operation.
The felt pinions are subject to wear and harden with time. They therefore need to be regularly checked and where applicable replaced. Their average operating life is about one year.
Information about lubricating the guideway can be found in Section 4.15 - Lubrication.
For lubricating accessories for MONORAIL BZ, see SCHNEEBERGER MONORAIL and AMS product catalogue.

5.6.3 Coatings

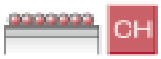

The MONORAIL BZ systems with surface coatings to protect against corrosion are available on demand.
It is important to note that only the carriages and guide rails are coated. The racks and pinions available as an accessory should remain uncoated.

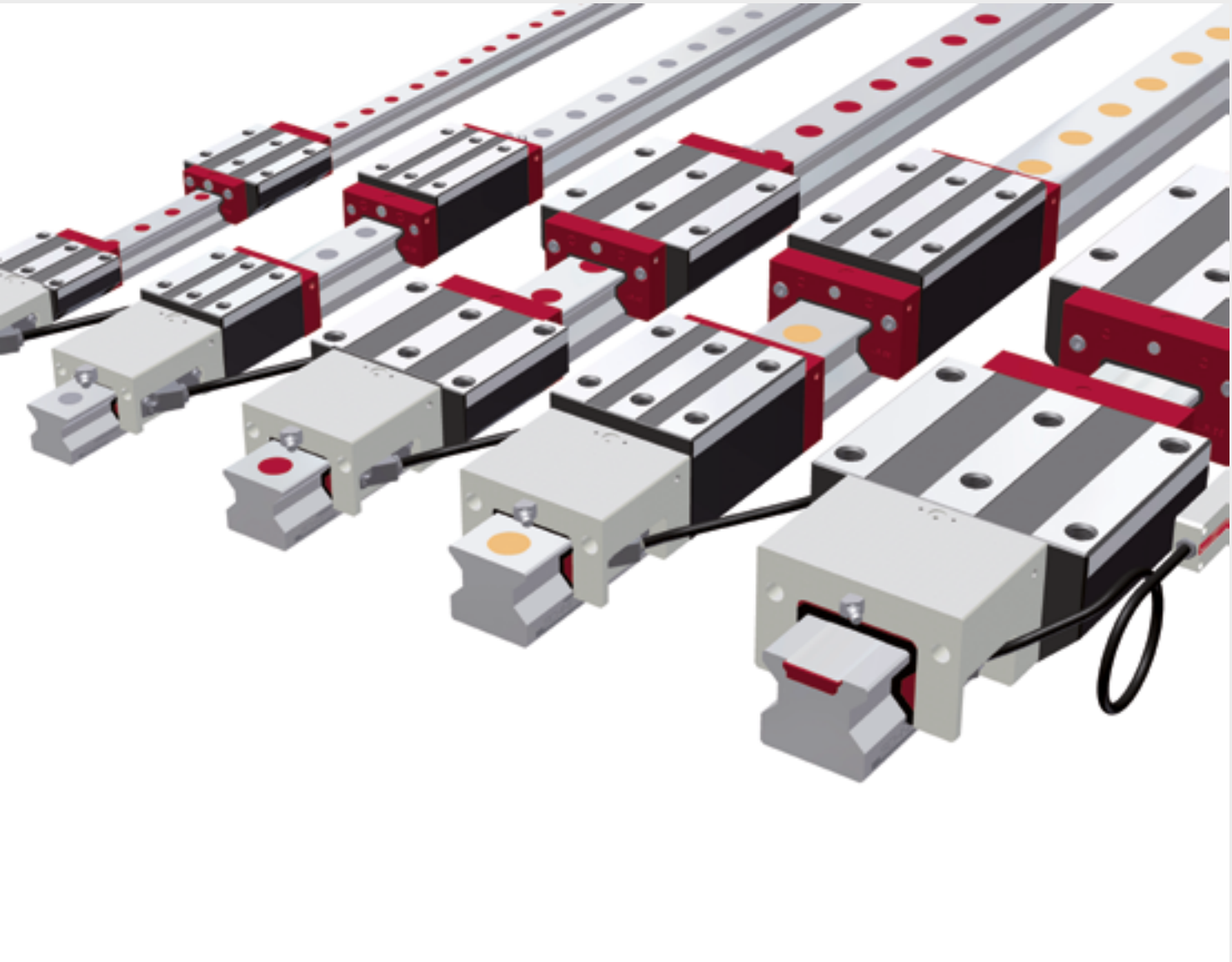

SCHNEEBERGER
LINEAR TECHNOLOGY

6	Development and design: Measuring	189
6.1	Integration	192
6.1.1	Characteristics	192
6.2	Product overview	193
6.2.1	Measuring systems	193
6.2.2	Guide rail types	194
6.2.3	Carriage types	194
6.2.4	System comparison – technical data	195
6.2.5	Accessories	196
6.3	Factors influencing the choice of product	197
6.3.1	Choice of product	197
6.3.2	Examples of use	199
6.4	Arrangement of the measuring systems	200
6.4.1	Arrangement of the measuring system and reading head	200
6.4.2	Cabling and connection to the controller Reading head interface	202
6.5	Operating conditions	205
6.5.1	Lubrication	205
6.5.2	Wear and service life	205
6.6	Shielding	206
6.6.1	Definition	206
6.6.2	Types of shielding	206
6.6.3	Shielding for the SCHNEEBERGER distance measuring system	206

6.1.1 Characteristics

With AMS, SCHNEEBERGER provides a distance measuring system fully integrated into the profile rail guideway, which can be installed directly without alignment and adjustment. With an easily interchangeable reading head and the system's impervi-ousness to all kinds of dirt, the necessary servicing and maintenance work are also reduced.
Consequently, cost savings in terms of design, manufacturing and maintenance of products are achieved thanks to its integrated design, and the combination of its high-precision scale and the MONORAIL guide rail.

Accuracy

- Coefficient of expansion like steel
- Good thermal connection with the machine base
- Measurement close to the machining process
- Optimal alignment of the scale
- Vibration-resistant technology
- The measuring scale is produced as a ready-to-fit component

Installation and adjustment

- Ready-to-fit solution (no additional overheads)
- No alignment of the measuring scale
- No additional mounting brackets needs
- Extremely straightforward commissioning (no adjustment)
- Phase-locked interchangeable solution (AMSA-3L)
- No sealing air required

Service and maintenance

- Parts subject to wear are interchangeable
- One reading head for all sizes
- Simple reading head replacement in case of a fault
- Protection class IP68
- Resistant to oil, coolant, solvent
- Non-corrosive cover for the scale
- Impervious to all kinds of foreign particles
- Interchangeable guide rail segments (AMSA-3L)

Design and production process

- Reading head and electronics are a single part
- Short construction times, compact solutions
- Multiple reading heads can be operated on one guide rail
- Standard accessories for MONORAIL can be deployed
- Single-piece up to 6m. Standardised segment lengths for longer lengths
- Special guide rail ends and reading heads for longer travels with butt jointed rails (AMSA-3L)

6.2.1 Measuring systems

SCHNEEBERGER offers integrated measuring systems for both BM and MR types.

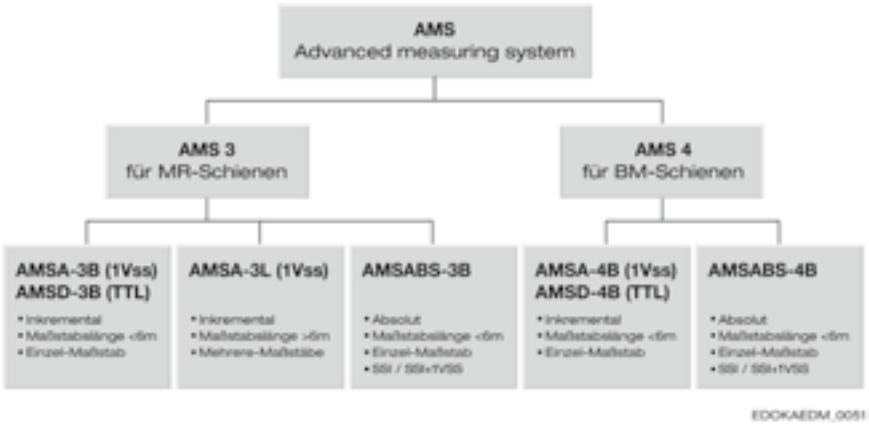

For most systems the measuring length is limited to 6 m.
For larger measuring lengths there is AMSA-3L based on the MR roller guideway and the incremental analogue interface.

AMSA 3L is possible as a result of the highly accurate construction of the rails in terms of both mechanics and metrology. The special design of the guide rail butt joints combined with the AMSA-3L reading head makes it possible to travel over joints and to build measuring axes of any length.

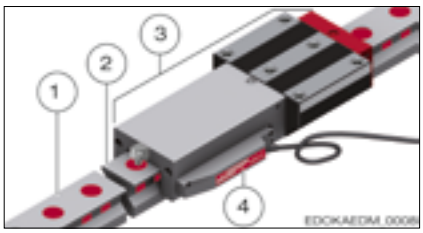

1 AMSA 3L measuring rail
2 AMSA 3L joint
3 AMSA 3L carriage
4 AMSA 3L reading head

AMSA 3L measuring system

The AMSA 3L product sets itself apart due to the following special features:

- Large measuring length
- High level of accuracy for large measuring lengths
- Travels over joints without loss of accuracy
- Integrated electronics in the reading head
  - ➔ No additional electronics
- Individual rail segments interchangeable
- One reading head for all sizes

6.2.2 Guide rail types

The guide rails with integral scale are no different in terms of their cross-sectional geometry to standard guide rails.
The product portfolio, however, is limited in terms of fastening options:

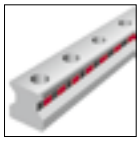

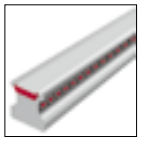

Sizes/ Guide rail types	N standard	NU with thread from below	C for cover strip
Size 15	AMS 4B S 15-ND*		AMS 4B S 15-CD*
Size 20	AMS 4B S 20-N		AMS 4B S 20-C
Size 25	AMS 3B/4B/3L S 25-N	AMS 3B S 25-NU	AMS 3B/4B S 25-C
Size 30	AMS 4B S 30-N		AMS 4B S 30-C
Size 35	AMS 3B/4B/3L S 35-N	AMS 3B S 35-NU	AMS 3B/4B S 35-C
Size 45	AMS 3B/4B/3L S 35-N	AMS 3B S 45-NU	AMS 3B/4B S 45-C
Size 55	AMS 3B/3L S 55-N	AMS 3B S 55-NU	AMS 3B S 55-C
Size 65	AMS 3B/3L S 65-N	AMS 3B S 65-NU	AMS 3B S 65-C
Special Characteristics			
Fixing from above	•		•
Fixing from below		•	
Minimal Assembly effort		•	•
Large one-piece system lengths	•	•	•

Note: • = applicable, * Size 15 guide rails are fully hardened

The MONORAIL AMS guide rail is also no different in terms of its mechanical characteristics to the standard MONORAIL guide rails. Consequently, details for

- Tolerances of guide rail lengths and fixing holes
- Permissible screw tightening torques
- Permissible lateral force without locating surface
- Details about guide rail types, fastening methods and maximum single-part guide rail lengths

can be found in Section 4.3 - Guide rail types and 4.11 - Attaching the guide rail

6.2.3 Carriage types

All AMS systems can be combined with any carriage available for the guide system (except K-carriages). Details on the different carriage types can be found in Section 4.3 - Carriage types.

6.2.4 System comparison – technical data

SCHNEEBERGER supplies distance measuring systems for a variety of applications. Set out in the table below are the applications and technical specifications of the different systems.

Technical data for distance measuring systems

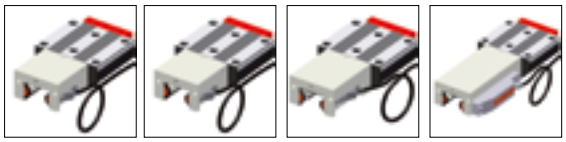

	AMSA 3B/4B	AMSD 3B/4B	AMSABS 3B/4B	AMSA 3L
Distance measurement				
Incremental	•	•		•
Absolute			•	
System characteristics				
Measuring scale	Hard-magnetic periodic north-south graduation	Hard-magnetic periodic north-south graduation	Hard-magnetic periodic north-south graduation	Hard-magnetic periodic north-south graduation
Signal period	200 µm	200 µm	200 µm	200 µm
Reference marks equidistant	50 mm	50 mm		L4*
Distance-coded (base period)	40/100 mm	40/100 mm	absolute	
Diagnostics LED	•	•	•	
Maximum scale length				
≤ 6000 mm	•	•	•	
> 6000 mm				•
Integration				
MONORAIL MR	•	•	•	•
MONORAIL BM/BZ	•	•	•	
Accuracy				
Accuracy class/ 1000 mm	± 5 µm	± 5 µm	± 5 µm	± 5 µm
Accuracy class/ 40 mm	± 2 µm	± 2 µm	± 2 µm	± 2 µm
Periodic deviation	± 0.7 µm	± 1 µm	± 0.7 µm	± 0.7 µm
Overall accuracy at the butt joint				± 7 µm
Maximum resolution	••	0.2/1.0/5.0 µm	0.0977 µm	••
Hysteresis	< 0.5 - 1 µm	< 0.5 µm**	< 0.5 - 1 µm	< 0.5 - 1 µm
Movement				
Maximum speed	3 m/s	3 m/s	3 m/s	1 m/s
Vibrations / Impacts	30 g	30 g	30 g	10 g

	AMSA 3B/4B	AMSD 3B/4B	AMSABS 3B/4B	AMSA 3L			
Interfaces electric							
analogue	1 V_{SS}			1 V_{SS}			
digital		Quad. signal RS422 (TTL)					
digital absolute			SSI, SSI + 1 VSS				
Supply voltage	5 ± 0.25 V	5 ± 0.25 V	5 V ± 10 % 24 V ± 10 %	5 ± 0.25 V			
Current consumption (unloaded)	40 mA	110 mA	< 200 mA	50 mA			
Interfaces mechanical							
connector type S	•	•		•			
connector type R	•	•	•				
connector type M	•	•	•	•			
Environment							
Protection category	IP 68 (up to 0.3 bar)	IP 68 (up to 0.3 bar)	IP 68 (up to 0.3 bar)	IP 67			
Working temperature	0°C - +70°C	0°C - +70°C	0°C - +70°C	0°C - +70°C			
Storage temperature	-20°C - +70°C	-20°C - +70°C	-20°C - +70°C	-20°C - +70°C			
Vibrations / Impacts	30 g	30 g	30 g	10 g			

Note: • = applicable, •• limited by controller, in connection with SMEA up to 0.0625µm, * except MR45, here 105 mm (at the guide rail butt joint 52.5 mm), ** or digitally adjustable

6.2.5 Accessories

A large part of the accessories for the corresponding MONORAIL guide systems are used for the MONORAIL AMS systems. These include:

- Plugs for the guide rails (MRK/BRK, MRS/BRS, MRZ)
- Cover strips (MAC/BAC)
- Installation tools for plugs (MWH)
- Additional wipers (ZCN/ZBN, ZCV/ZBV)
- Bellows (FBM/FBB)
- Lubrication plates (SPL)
- Lube nipples and lubrication adapter

In addition, SCHNEEBERGER offers special accessories for MONORAIL AMS:

- Cable
- Metal wipers for AMS (ASM/ABM - xx A)
- Assembly fixture for AMSA 3L (MWM 3L)
- End piece for AMSA 3L guide rails (EST 3L)
- Assembly rail for AMSA 3L (MRM 3L)
- Configuration software for AMSD and AMSABS

A full overview of the available accessories can be found in the SCHNEEBERGER MONORAIL and AMS product catalogue.

6.3.1 Choice of product

The following factors influence the choice of distance measuring system:

- Type of guideway: roller - ball
  - Selection tools can be found in Section 4.2 - Ball - roller comparison
- Absolute - Incremental measuring procedure
  - Interfaces, availability in Section 6.2 - Product overview
- Interface Analogue - Digital
  - Details can be found in Section 3.2 - Principles
- Accuracy of the measuring system
  - Specific details in sections 3.2 - Principles and 6.2 - Product overview
- Referencing procedures
  - The different referencing procedures are explained in Section 3.2 - Principles, and availability is outlined in Section 6.2 - Product overview
- Speed
  - Depending on the guide system used; see Section 6.2 - Product overview
- Measuring length
- Environmental conditions
- Controllers

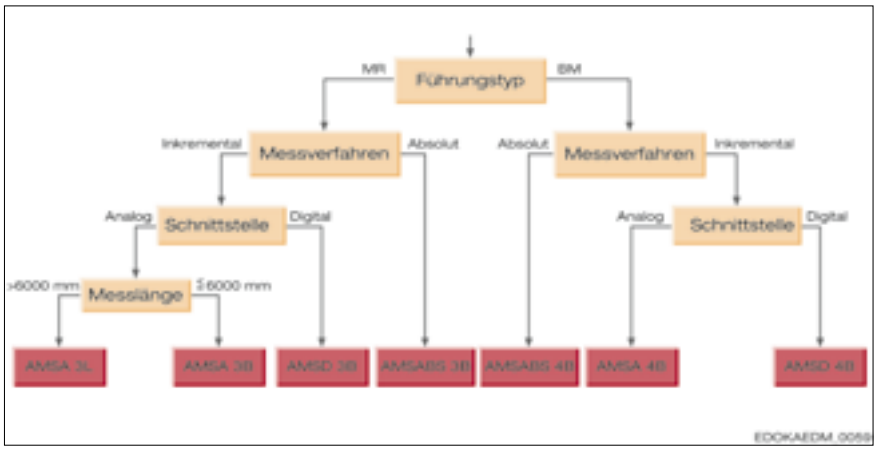

Measuring length

The measuring length for linear distance measuring systems is the maximum stroke along which the distance information can be obtained. It depends on the length of the measuring scale in scale-specific systems.

The measuring length ML for the MONORAIL AMS is worked out according to the figure from the guide rail length L3 and the length of the carriage including reading head housing L9 as
ML = L3 - L9 - 10 (mm).

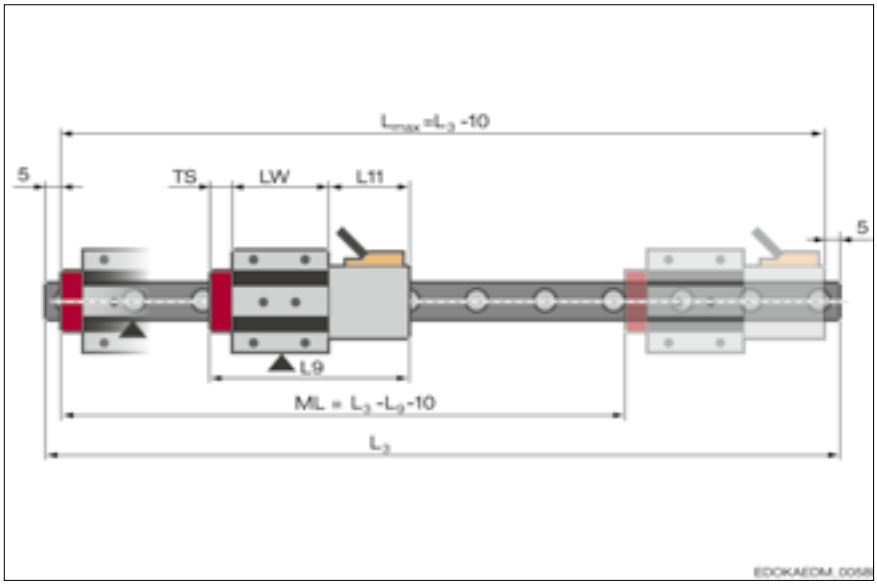

Maximum usable length (L_{max} = L3 - 10) and measuring length (ML = L3 - L9 - 10):

L_{max}	maximum usable length of the system	L9	Total length of carriages with housing
ML	Measuring length	L11	Length of the housing
L3	Guide rail length	TS	Thickness of the front plate
		LW	Inner carriage body length

For larger measuring lengths "AMS long" has been developed by SCHNEEBERGER. Detailed information about this product can be found in Section 6.2 - Product overview and Section6.7 - Multi-part measuring rails.

In the case of scales with distance-coded reference marks, the base period determines the maximum encodable length, which in turn limits the measuring length of the measuring system. For these systems the base period is often selected to be small for short axes to reduce the maximum travel distance required for the reference journey. The smaller the base period, the smaller the encodable length.
SCHNEEBERGER offers different base periods for its AMS products with distance-coded reference marks.
The following table outlines the maximum encodable length L_{max} depending on the SCHNEEBERGER standard base periods GP.

Name	GP (mm)	L_{max} (mm)
TD20	40	2840
TD50	100	22100 (theoretical)*

Note: * limited to 6000mm due to maximum guide rail length

Environmental conditions
When using coolants, compatibility with the lubricant needs to be checked and the subsequent lubrication intervals curtailed accordingly. For extended standing times or short stroke, additional strokes over the entire travel distance should be provided, so-called lubricating and cleaning strokes. They should prevent sticking and clogging of coolants. Stick-on dirt can affect the functionality of the measuring system and damage the sensor.
If swarf or similar occurs during operation, adequate protection of the measuring systems should be provided in the form of covers.

Controllers

The SCHNEEBERGER distance measuring systems can be used with most industrial CNC controllers, such as for example the Siemens SINUMERIC CNC controllers and the FANUC CNC controllers.

More detailed information on controllers that can be used and their specific settings can be obtained from the controller manufacturer or via the competent SCHNEEBERGER agent.

6.3.2 Examples of use

Product	Features	Examples of use
AMSABS 3B, 4B	• Integrated absolute measuring system for MONORAIL MR and BM • Use typical in CNC machines for scale length ≤ 6 m	Turning, grinding, milling and general machining equipment
AMSA 3B, 4B AMSD 3B, 4B	• Integrated incremental measuring system for MONORAIL MR and BM • Use typical in CNC machines with axle lengths ≤ 6 m	Turning, grinding, milling and general machining equipment
AMSA 3L	• Integrated incremental measuring system for MONORAIL MR • Use in all CNC large-scale machinery with stroke > 6 m	Large-scale milling machines and lathes, drilling machinery, automated lines, systems for aircraft production

6.4.1 Arrangement of the measuring system and reading head

Reading head position and locating sides

The AMS reading head can be arranged on the carriages in four positions. This supports flexible adaptation of the measuring system to the structural design.
The following steps are necessary for the configuration:

- Determining the locating side of the rail
- Determining the side of the scale
  - All combinations are possible here. The respective descriptions are:

Locating side at bottom, scale at bottom

Locating side at bottom, scale at top

Locating side at top, scale at bottom

Locating side at top, scale at top

- Determining the locating side of the carriage in relation to the rail
  - Locating side of carriage:

Reference edge at bottom

Reference edge at top

- The reading head position can be determined by the first steps and the need to position the reading head on the side of the scale.

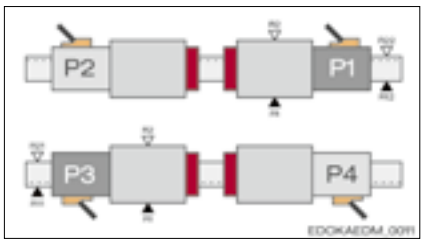

P1 Housing right, reading head top
P1 Housing left, reading head top
P3 Housing left, reading head bottom
P3 Housing right, reading head bottom

Position of the housing

Arrangement of the measuring systems

SCHNEEBERGER recommends positioning the reading head between carriages on the outside of the guideway. This has the following advantages:

- No additional installation space or additional rail length for the housing and the reading head is required
- Protected position for the reading head between the carriages
- Generally good accessibility of the reading head for servicing

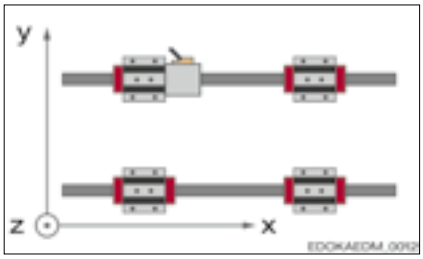

Position of the reading head with multiple carriages

In addition, depending on the installation orientation of the axis the following recommendations should be taken into account.

Horizontal axes

Rails are horizontal adjacent to one another, vertical or rotated by 180°. The general recommendation applies here for arranging the reading head between the carriages. The reading head is in any case well protected provided the machine slideway covers the area of the guideway and of the reading head and the machine is set up in such a way that no dirt or swarf accumulation can be deposited next to the rail.
When being used in a dirty working environment and when using coolant, additional protective measures are necessary.

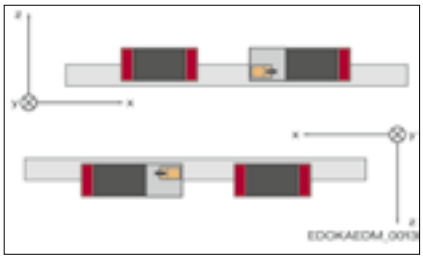

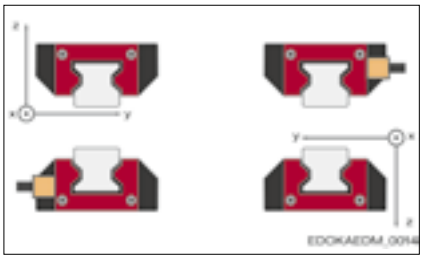

Reading head arrangement for a horizontal axis

Vertical axes

The optimum position is as illustrated in the figure hanging below the upper carriage. Falling particles of dirt and swarf are not able to deposit themselves on the reading head. The supply of lubricant is guaranteed by a lube connection on the upper carriage.

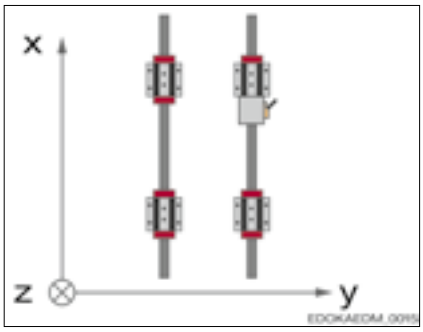

Reading head arrangement for a vertical axis

Horizontal axes with wall assembly

Rails are arranged above one another and rotated by 90°. The best position for the reading head, depending on accessibility of the axis, is either on the underside of the bottom rail, provided you ensure that no dirt of swarf accumulate in this area, or on the underside of the top rail. This recommendation also applies in respect of inclined bed axles with, for example, an installation rotated around the longitudinal axis.

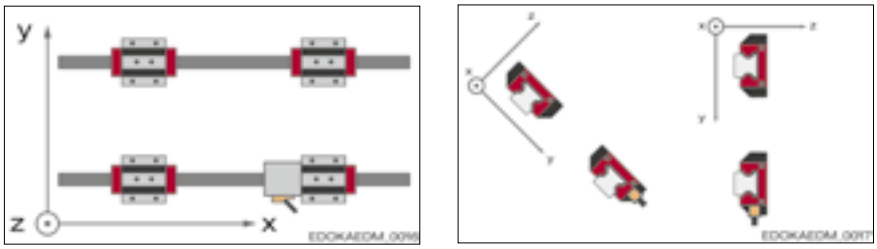

Reading head arrangement for the horizontal axis with wall assembly; rotated 90° around the longitudinal axis or inclined installation, e.g. inclined 45° around the longitudinal axis

Further information about arrangement of the guideway, installation orientation and lubrication can be found in Sections 4.8 - Arrangement of the guideway and 4.9 - Installation methods for guide systems.

6.4.2 Cabling and connection to the controller Reading head interface

The AMS measuring systems depending on the type can be supplied with different mechanical interfaces, see also SCHNEEBERGER MONORAIL and AMS product catalogue. In principle, three different connector variants are offered:

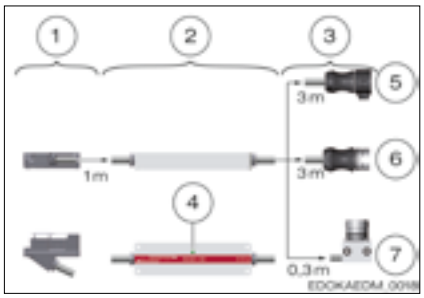

1 Reading head
2 Electronics box
3 Interfaces
4 Service LED
5 Connector type S: 12-pin round plug with contact pins and union nut with internal thread, cable length: 3 m
6 Connector type R: 12/17-pin round plug with contact pins and union nut with external thread, cable length: 3 m
7 Connector type M: 12/17-pin round plug with contact pins and external thread, built into a mounting base, cable length: 0.3 m

Overview of components in an AMS reading head

SCHNEEBERGER recommends using connector type M, as this can be fitted directly to the machine close to the cable carrier via the fixing holes in the mounting base. From here it is then possible in the case of AMSA and AMSD to run on to the connection point for the controller using a KAO 13-type extension cable.
For an overview of interfaces, extension and connection cable, see SCHNEEBERGER MONORAIL and AMS product catalogue.
As a special implementation the reading head interface is also available with a 0.17m long connecting cable between the reading head and the electronics box.

Electronics box

The electronics box for the reading head should be fitted so that the front of the box is easily accessible for servicing. Here there is an LED to display the operating state. Otherwise it is important to ensure that the cables from and to the box after being laid are tensioned and have the minimum bending radiuses (see below).

Cable

When laying cables for the measuring system, the following points must be observed:

- 12-pin cables with a minimum cross-section of [4 x (2 x 0.14) + (2 x (2 x 0.5)] mm² should be used as an extension and connecting cable between the measuring system and the controller.
- The maximum cable lengths are:

Signal type	Maximum cable length
analogue	30 m
digital	50 m
absolute	30 m

- When using AMS with an analogue signal and interpolation and digitizing electronics SMEa, the specified cable lengths also apply, which means that a max. of 30 m between the measuring system and SMEa and 50 m between SMEa and the controller.
- For cable conduits, observe the dimensions of the mounting base in accordance with the catalogue or a connector diameter (Ø = 28 mm).
- Do not lay cables next to interference sources, e.g. magnetic fields from voltage supplies, mains electricity lines, motors, valves, relays and their feeds. An adequate distance to interfering cables is achieved by observing:
  - a distance of 0.1 m
  - an earthed intermediate wall, when metal cable ducts are used
  - A minimum distance of 0.2 m to the storage chokes in switched mode power supplies
- Separate hydraulic hoses and electrical cables.
- Lay the reading head cable statically wherever possible, that is not in cable carriers for example. Use an extension cable for cable carrier.

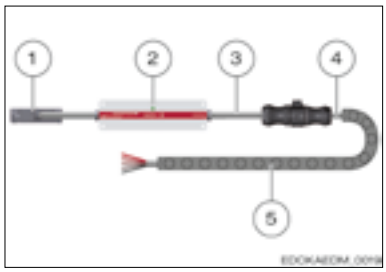

1 Reading head
2 Electronics box
3 Reading head cable
4 Extension cable
5 Cable carrier (not included)

Reading head interface with cable carrier

- Do not use sharp-edged ducts.
- Lay cables without any tensile load.
- Observe bending radiuses for cables:

Cable diameter	Permissible bending radius	
	Alternating bending	Single bend
6 mm	> 75 mm	≥ 20 mm
8 mm	> 100 mm	> 40 mm

Shielding

The cables for the AMS measuring systems are shielded as standard against electromagnetic interference fields. The shielding in the connecting cable is connected to the controller via the connector housing.
In addition to the cable shielding, the metal housing from the measuring system and drive controller act as shielding. This housing must demonstrate exactly the same electric potential. They must be connected to the protective ground wire of the driver controller via the machine body or the controller cabinet. The cross section of the equipotential bonding conductors must be at least 6 mm² (Cu).

- Connect the housing of the measuring system and drive controller via the machine body and/or the controller cabinet to the earth of the drive controller.
- Connect the cable shielding of the connecting cable to the drive controller directly with the connector housing covering a large surface area and with the lowest induction possible.

Note

➡ When connectors are present in a cabling run, avoid electrical contacts between the connectors (plugs) and other metal components.

➡ So that no grounding occurs via the metal housing , only use transmission lines with plastic coated metal connectors.

Accessibility of the measuring system when installed

In case of inaccessible axes it is recommended to create a service hatch in the machine so that service work can easily be carried out on the measuring system. In this way the reading head and the connection from the reading head cable and extension cable should be easy to reach.

6.5.1 Lubrication

The lubrication for the measuring the system is indirect via the carriages in the MONO-RAIL guideway. For this the carriages are lubricated as per the specifications in Sections 1.12 - Lubrication and 4.15 - Lubrication; additional lubrication is not necessary.
The lubrication fulfils the following tasks for the measuring system:

- To reduce sliding friction and wear of the seals
- Together with the sealing system, to prevent penetration of liquid or solid foreign bodies into the housing (with grease lubrication).
- Dissipate heat or rinse dirt (in the case of oil lubrication)
- Protect against corrosion
- Separate the metal and ceramic sliding components with the formation of a film of stable lubricant
- Minimise wear on the sensor slider

The function of the sensor is not affected when lubrication according to specifications.

6.5.2 Wear and service life

Lubrication of the measuring system counteracts wear on the wipers and wear on the sliding components. With adequate lubrication, no notable wear occurs to the sliding components which means that the service life of the guideway is critical for the service life of the measuring system.
In addition, the SCHNEEBERGER AMS system has been developed so that with inadequate supply of lubricant the mechanical wear on the AMS cover strip (guide rail) is negligible compared to that of the shoe (reading head). Consequently, wear would occur on easily interchangeable system components.

6.6.1 Definition

Shielding means in very general terms the protection of electronic devices against electromagnetic interference. This can either affect the device due to electromagnetic radiation or be conductor-based, in which case the transmission of an interference-prone conductor onto another conductor can occur due to a capacitive or inductive link. As the frequency range of electromagnetic interference is very large in industrial settings and ranges from about 10 kHz in the case of contactors, switching regulators etc. to 3 GHz for mobile phones, and the different mechanisms for transmission of interference are to a great extent frequency-dependent, it is very difficult to predict which transmission routes will predominate for interference in the respective application and which shielding measures will be the most effective.

6.6.2 Types of shielding

Most shielding measures use the concept of the Faraday cage or discharging interference, mainly in a general reference potential "earth" or "protective ground wire", in which case both methods are generally used in combination with one another. The principle of the Faraday cage is based on the fact that the Interior of a closed, electrically conducting body is field-free. The shielding of a cable is an example of a Faraday cage, in which an "enclosed state", in other words coverage, of 85% and more is achieved. The interference currents flowing in the cable shielding, that is voltages and currents caused by external electromagnetic radiation, need to be discharged to the reference potential as efficiently as possible. In the case of alternating voltage, frequency-dependent complex resistances (impedances) occur, which can lead to interfering voltage drops in particular across connection points on different device parts such as cable shielding, plug, housing, cover, earthing terminal, etc.. A lower ohmic dc resistance does not yet say anything about the quality (impedance) of a connection in terms of high-frequency interference fields. Short longitudinal dimensions, large cross-sections, a large surface-area connection in two parts and a large distance from the interference source are all helpful. A long, thing earthing wire, on the other hand, is more or less ineffective.
The emitted interference or sensitivity to interference of electrical and electronic systems is regulated by various international standards and there are a wide number of standardised testing procedures for this. The SCHNEEBERGER AMS systems have undergone and passed such tests based on the standards EN 55011, EN 61000-4-2, EN 61000-4-3, EN 61000-4-4, EN 61000-4-5, EN 61000-4-6 and ENV 50204.

6.6.3 Shielding for the SCHNEEBERGER distance measuring system

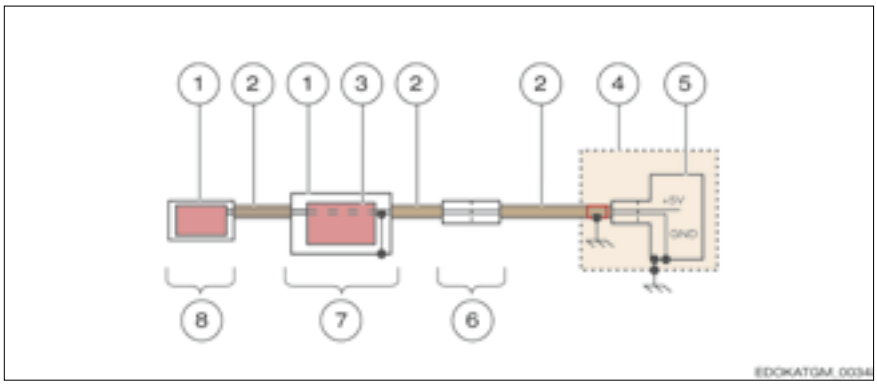

SCHNEEBERGER shielding design

1	Housing	5	Motor controller
2	Cable shielding	6	Connector
3	Electronic switch	7	Electronics housing
4	Control cabinet	8	Reading head

The housings with the cable shielding form an enclosed Faraday cage. The cable shielding is connected to the connector housing. To earth the measuring system, the cable's outer shielding must be connected with the earth in the switching cabinet, and so the interference currents can be discharged in this way. In the switching cabinet or controller 0 V = GND is connected with earth (protective ground wire).
By using EMC-compliant cable glands, the transition from cable shield to housing can also be achieved at low impedance. Otherwise in the electronics housing 0V is connected with the shielding which means that interference can also be effectively diverted away to the supply cables.

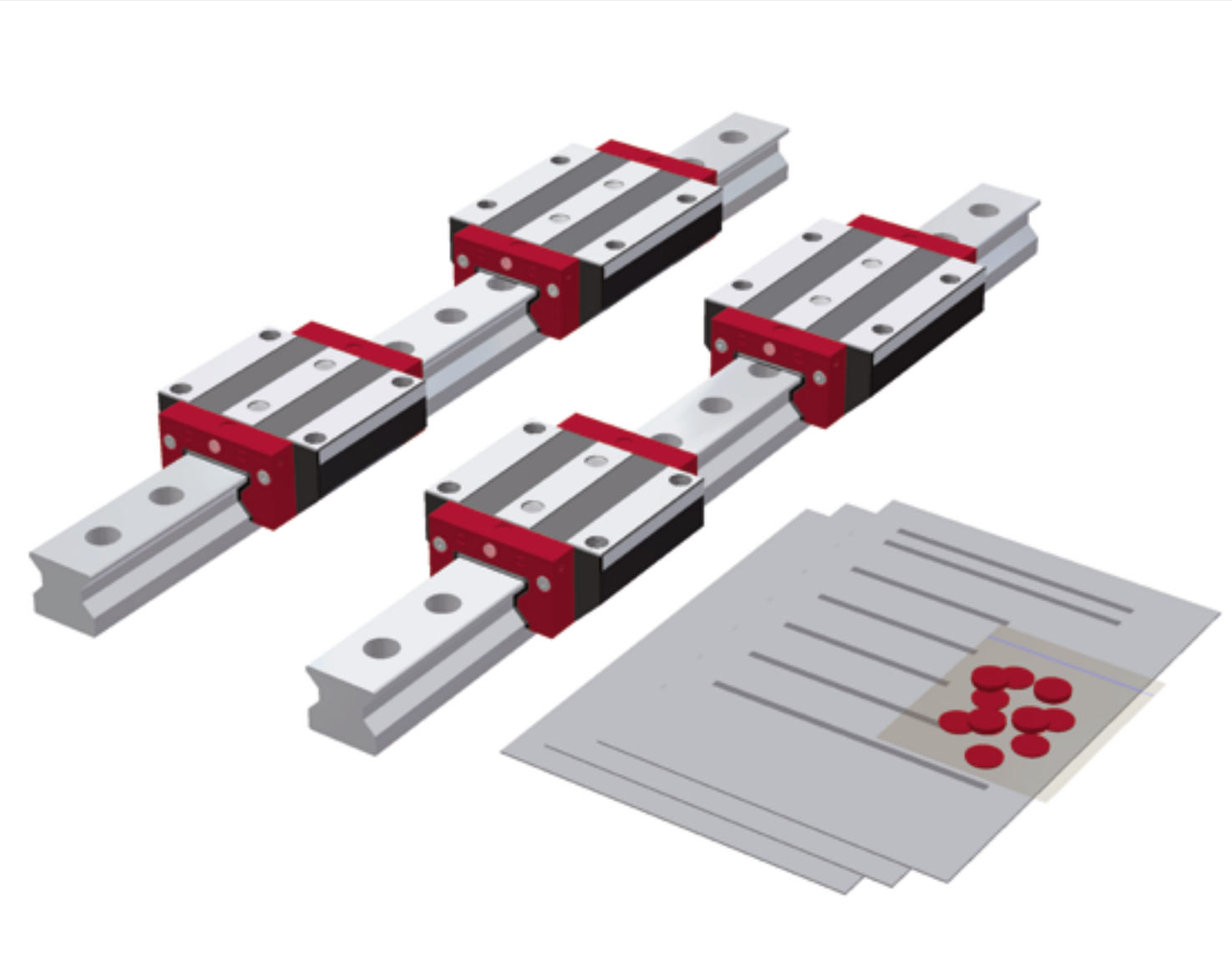

SCHNEEBERGER
LINEAR TECHNOLOGY

7	Storage and transport	209
7.1	Delivered condition	212
7.2	Storage	213
7.3	Transport	214

The delivered condition of SCHNEEBERGER MONORAIL guideways is described here. As standard all guideway components are delivered individually packaged.

Individual packaging

All guideway components are supplied unassembled in individual packaging. Accessories are included in a separate package.
If not defined by the customer, all standard lubrication connections are open and closed with grub screws (S99, S98). Lubrication connections that are not required for use are closed.
Individual carriages are supplied on a transport rail to protect the rolling elements.
AMS systems are installed ready to plug-in, electrical accessories and cables are packaged with the mechanics. In its delivered condition the reading head can be installed into the housing or be supplied as an individual component in separate packaging.

System delivery

A system delivery means that the carriages are mounted with all accessories and enclosed with the guide rail in the same package. Lube connections on the carriages are prepared according to the customer's specifications.
Lubricating accessories are installed as specified or supplied in separate packaging.
With AMS systems, the carriages are mounted with all accessories and installed onto the guide rail.

Corrosion protection

The external surfaces of the carriages and of the rails are treated with a hardening corrosion protection. The rolling elements are given a mineral-oil-based corrosion protection. Grease protection can also be provided, on request. Carriages and guide rails are wrapped with a corrosion protection film. Additional precautions are taken for special requirements such as overseas transport.

Packaging material

Cardboard packaging is used for individual rail deliveries and for system deliveries. Wooden crates are possible for certain countries or special requirements for an additional fee. These are covered by the IPPC (International Plant Protection Convention). The carriages are packed individually in cardboard boxes. Carriages and rails are always wrapped with VCI film to protect them from corrosion before delivery. For system delivery, inserts made of corrugated cardboard (delivery in cardboard packaging) or maritime pine boards (delivery in wooden crates) are used. Accessories and lubrication accessories are included.

Accompanying product literature

Product-related mounting notes and operating instructions as well as customer-specific protocols are delivered with the products. Comprehensive installation instructions are obtainable on request from SCHNEEBERGER. See notes Additional literature.

SCHNEEBERGER MONORAIL guideways and the AMS distance measuring system are highly precise components, which have to be treated with care. To protect against damage, the following instructions should be followed:

- Storage in original packaging is only possible for a limited period. Check the condition of products at regular intervals.
- Guide rails must be supported over their entire length. For guide rails longer than 1.5 m, support in at least 3 places.
- Store rolled up cover strips in their original packaging, support straight cover strips over their entire length and do not bend.
- Store carriages on the guide rail or on a transport or assembly rail in order to protect the rolling elements.
- Do not store products exposed to the elements and protect against moisture / humidity.
- We recommend storage in packaging that corresponds to the original condition.
- High humidity and extreme temperatures and temperature fluctuations are to be avoided. Otherwise there is a risk of condensation, corrosion and possibly separation of the grease into thickener and oil.
- Protect the SCHNEEBERGER MONORAIL guideways with AMS distance measuring system from magnetic fields and from mechanical damage. Magnetic fields can destroy the magnetization of the scale.
- In the case of the AMS measuring system, absolutely never remove the activation strips on the electronics box for the power supply. Only activate the battery when installing.
- Only remove the products from their original packaging at their installation location and immediately prior to assembly.

General

SCHNEEBERGER MONORAIL guideways and the AMS distance measuring system are highly precise components, which have to be treated with care. For transportation of these products in house, the following points should therefore be noted:

- Transport guideways and accessories in their original packaging.
- Protect guideways against impacts and moisture / humidity.

Rails

Warning

Rails can fall down during transportation and injure people

➡ Suspend long rails at several points with a crane during transportation.

➡ Observe the balance of long guide rails.

Cover strips

- Cover strips may not be bent during transportation. They must always be supported over their entire length or be transported rolled up.
- Observe the minimum bending radius (Rmin = 0.4 m) of the cover strips.

Carriages

Caution

Transport rails are not suitable for installing the carriages.

➡ Use an assembly rail (MRM or MBM) for guiding carriages on to the guide rail.

- To prevent loss of rolling elements, protect carriages against shock loads.
- Always transport on the guide rail or on a transport rail or assembly rail.

Measuring system

Caution

Magnetic fields can destroy the magnetic scale of the AMS guide rails.

➡ Protect rails with an integral scale from magnetic fields.

➡ Do not use lifting magnets for transportation.

- Protect AMS reading heads from sudden vibrations or impacts (max. impact load 30 g).
- Always transport reading heads together with the carriages. Only remove reading heads for transferring the carriage onto the guide rail from the housing.

Transport packaging

The MONORAIL products are either sent in individual cardboard boxes, in wooden crates or on pallets containing several packaged items. The packaged items can be up to approx. 6 m in length. For cardboard packages from a gross weight of 30 kg upwards, disposable or returnable pallets are placed underneath to make them easier to stack. For a package length greater than 1.50 m boards are also placed under the cardboard boxes for reinforcement to prevent them from sagging dangerously.

- In the case of wooden crates and pallets, pick-up points for fork-lift trucks should be noted to avoid any damage.
- Pick up long packaged items with its centre of gravity in the middle.
- Wooden creates can be stacked on top of one another up to a maximum weight of 1,000 kg.
- Cardboard boxes can be stacked up to a weight of 100 kg / m^2.

BZ transport protection

MONORAIL BZ systems with integral rack are supplied together with an aluminium

L profile to improve transport reliability and handling. After successfully installing the system, the aluminium profile is disassembled and can be disposed of. It is possible to arrange a return consignment for recycling on a case by case basis with SCHNEEBERGER, where applicable containing all installation components.

- Always transport and store BZ systems with the transport fixture.
- Remove transport fixture

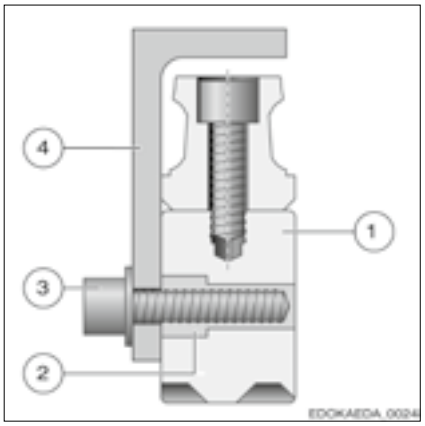

1 BZ system
2 Clamp
3 Screw
4 Transport fixture

Transport fixture for guide rail with rack

Auxiliary tools

All lifting devices, crane or fork-lift truck can be used as auxiliary tools for moving individual carriages and guide rails of packaged items.

- Only use appropriate lifting devices.
- The lifting device may not damage the products or their packaging.
- The lifting device must minimise the amount of sag.

Handling instructions

The following symbols can be found on the transport packaging, which must be observed.

Name	Symbol	Explanation
Zerbrechliches Packgut/ Fragile, Handle with care		The symbol should be applied in the case of extremely breakable goods. Goods described in this way should be handled with care and should on no account be thrown or strung up.
Oben/This way up	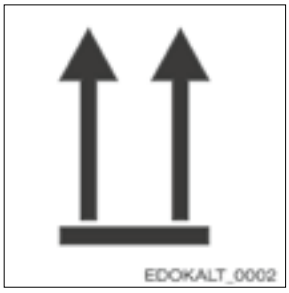	The packaged item must always be transported, packaged and stored so that the arrows are pointing upwards at all times. Rolling, collapsing, sudden jerking or tilting as well as other forms of handling must be avoided. The load should not, however, but piled "on top".
Vor Nässe schützen/Keep dry		Goods marked in this way should be protected from high levels of air moisture, they must therefore be stored covered up. If particularly heavy or awkward packaged items cannot be stored in warehouses or shelters, careful arrangements needs to be made for them.

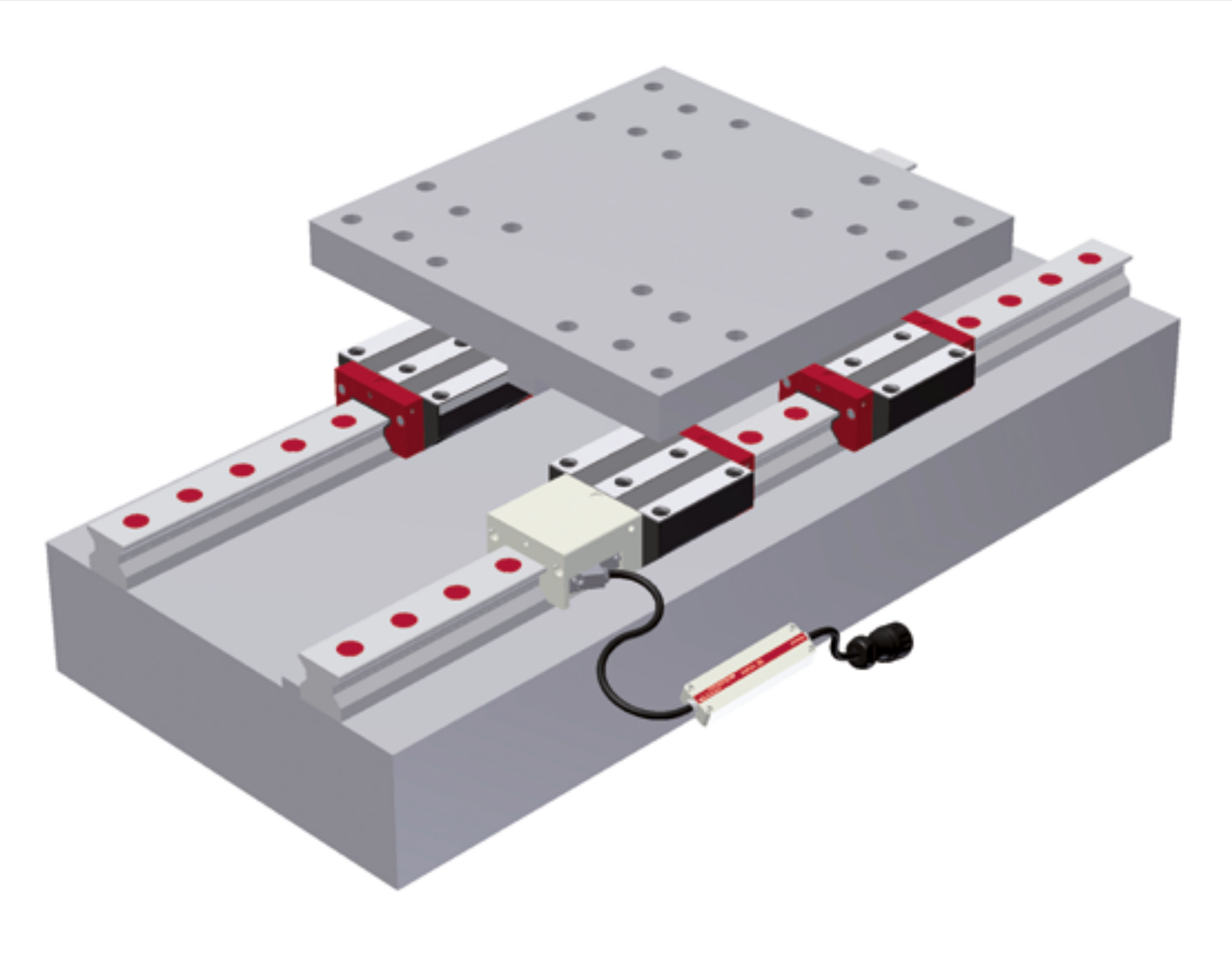

SCHNEEBERGER
LINEAR TECHNOLOGY

8	Commissioning	217
8.1	Guideway check list	220
8.1.1	Installation and checking system accuracy	220
8.1.2	Supply of lubricant	220
8.1.3	Corrosion protection	220
8.1.4	Initial lubrication	220
8.1.5	Lubrication plate SPL	221
8.2	Measuring system check list	222

Before commissioning the guideway, it is important to ensure that the performance of the guideway is optimised by checking the following points:

- Guideway properly installed
- System accuracy and push force verified
- Supply of lubricant guaranteed
- Anti-corrosive protective device removed and guide rail oiled
- Initial lubrication completed
- Rail covers fitted and their seating has been checked
- Functionality of the wipers checked
- Functionality and correct seating of the bellows checked

8.1.1 Installation and checking system accuracy

After fitting the guideway in accordance with the "MONORAIL and AMS installation instructions", system accuracy must be verified by measuring guide rail parallelism and running accuracy of the guideway or of the axis slide.

8.1.2 Supply of lubricant

It is important to ensure that the supply of lubricant works properly. When the carriage is moving at the same time as the centralised lubricating system is working, a thin film of lubricant must be present on the guide rail and no leaks should occur within the lubrication system.

8.1.3 Corrosion protection

When commissioning the guideway it is important to ensure that the factory-fitted anti-corrosive protective device on the guide rails is fully removed, see MONORAIL and AMS installation instructions, and that the guide rails are lightly moistened with the lubricant. A thin film of lubricant reduces the consumption of lubricant at the start of operation as any surface unevenness of the guide rail will be pre-filled with lubricant.

8.1.4 Initial lubrication

Before commissioning the machine, initial lubrication of the carriages (other than in cases of carriages with full greasing in the factory) should be completed with oil, grease or fluid grease.
Check the lubricants used for compatibility with factory preserving agents, coolants and other working materials.
Initial lubrication can be dispensed with in case of factory-based full greasing of the carriages.
When a centralised lubricating system is used ensure that the lubricating lines are properly connected and vented. Observe the system manufacturer's instructions.
After initial lubrication check that the lubricant has reached the lubrication points in the carriage. When the carriage moves a significant film of lubricant must be visible on the tracks of the guide rail.

Lubrication with grease

With grease or fluid grease make sure that when greasing the carriages they are moved along the rail, ideally several times by 3 times the carriage length, or at least by the length of a single carriage. In the event that the maximum stroke is less than the carriage length, take note of Section 4.15.8 - Application know-how on lubrication - requirements in respect of lubrication in special operating conditions.

Lubrication with oil

When lubricating with oil, the total quantity of oil should be injected in a single impulse or in several impulses in short succession while the carriage is actually being moved. In case of a specific installation orientation or short stroke, take note of the instructions set out in Section 4.15.8 - Application know-how on lubrication - requirements in respect of lubrication in special operating conditions.

8.1.5 Lubrication plate SPL

Lubrication plates are always delivered ready for installation, i.e., filled with oil. When delivering together with a MONORAIL system or individual carriages, the carriages are also pre-filled with grease.
When lubrication plates are retro-fitted, full greasing (LV) of the carriages is also necessary. For the recommended quantities of lubricant, see Section 4.15.6 - Lubrication with grease.
For additional information about the lubrication plate SPL, see Section 4.15 - Lubrication.

Rail covers

The guide rail fixing holes must be fully closed with a cover strip or plugs and the closures must be fitted so that no dirt build up is able to form neither can the carriage wipers be damaged as a result.
Cover strips must be placed on a clean guide rail surface without gaps and the ends must be secured with a fixing bracket or end pieces.
Plugs must be fitted flush and parallel with the guide rail surface and there should not be any residual swarf or burrs.

Wipers

The wipers on the carriages and on the accessory components must be checked to ensure they are properly seated and work correctly:
Standard wipers and additional wipers
The function of the cross wipers is guaranteed when lubricant applied to the guide rail is cleanly wiped off and when the carriage reverses no streaking occurs on the guide rail surface that has been travelled over.
Metal wipers
The wipers must form an even gap around the guide rail profile and should not make any contact with the guide rail.

Bellows

When using bellows correct installation on to the adapter plate and end plate must be ensured, as well as its freedom of movement.

Make sure that the performance of the measuring system is optimised by checking the following points:

- Carriage with housing is conveyed on the guide rail so that the recess for the reading head is located on the guide rail side with the scale. The scale side can be identified by the reference mark.
- Battery for AMSABS should be activated by removing the magnet on the electronics box. See Section 9.4.2 - Measuring system - AMSABS
- Reading head correctly installed in the housing, see additional documents.
- Cable and electronics box properly laid, see additional documents.
- Connection with the controller made. See Additional documents Section.
- LED for the operating state display (optional) is illuminated green after switching on the controller.

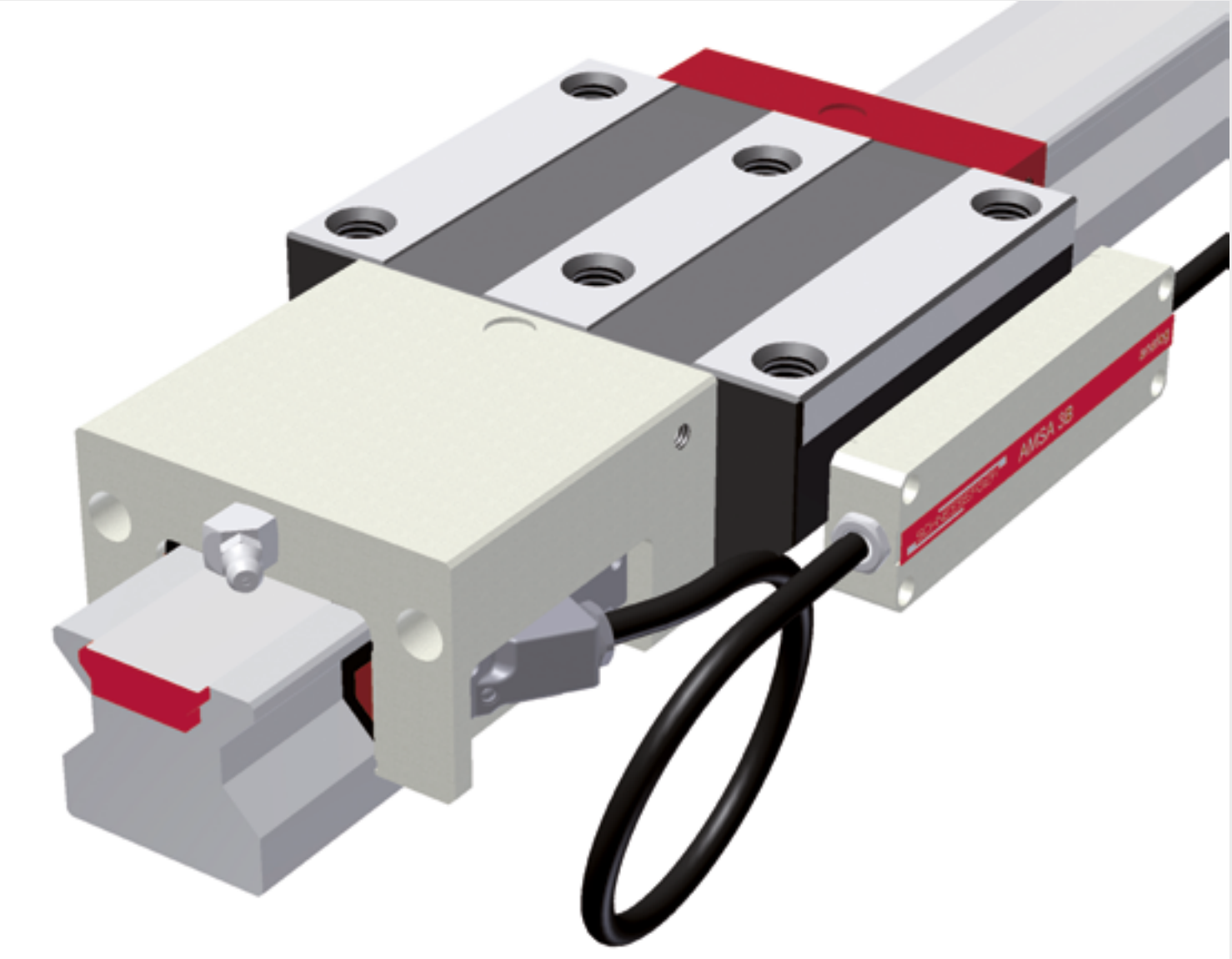

SCHNEEBERGER
LINEAR TECHNOLOGY

9	Operating, maintenance and service	223
9.1	Wipers	226
9.1.1	Testing	226
9.1.2	Replacement	226
9.2	Influencing factors on operating conditions	230
9.2.1	Environmental conditions	230
9.2.2	Operating conditions	230
9.2.3	Installation of the guideway	230
9.3	Precautionary measures	231
9.4	24 hour delivery service	232
9.4.1	Objectives and sequence	232
9.4.2	Products	232

9.1.1 Testing

Seals on SCHNEEBERGER MONORAIL guideways protect the carriages and the integral distance measuring system from penetration of foreign bodies in the form of solids or liquids and prevent the lubricant from discharging. Their functionality therefore influences the service life of the guideway significantly. In general, the seals are designed so that they are maintenance-free with sufficient lubrication and in a clean environment.
Often, however, the guideways are used under conditions in which dust and swarf can get on to the guideway. This also inevitably leads to wear of the sealing lips, as with inadequate lubrication.
The wipers on the front plates and additional wipers thus need to be checked for wear at regular intervals (maximum 6 monthly) and where applicable be replaced.

Standard wipers and additional wipers

The function check on cross wipers is carried out most simply using lubricant, which is applied to the guide rail. When propelling the machine slideway, the lubricant must be wiped off cleanly and when reversing over the guide rail surface that has already been passed over should not form any streaks. Otherwise the front plate (MR) and/or cross wipers (BM) or the additional wipers need to be replaced.

Metal wipers

Metal wipers like additional wipers and front plates need to be replaced in case of any visible mechanical damage.

9.1.2 Replacement

Note

- ➡ In the case of MONORAIL BM, the front plate is part of the rolling element recirculating unit. Pulling off the front plate will lead to the loss of balls. Only the cross wipers QAS and not the complete front plate are replaced in this instance.
- ➡ With MONORAIL BM it is important to note that when replacing or retrofitting additional wipers or lubrication plates the front plate is secured to prevent it from coming away. Doing otherwise can lead to a loss of balls.

Front plates and additional wipers can be individually re-ordered as spare parts. See Section 9.6 - Spare parts and the SCHNEEBERGER MONORAIL and AMS product catalogue. In case of damage to longitudinal wipers, which are mainly permanently connected with the carriage or housing (with integral distance measuring systems), the entire carriage will need to be replaced. Damage to longitudinal wipers can only usually be detected after complete uninstallation of carriage or housing components.

- When replacing front plates and additional wipers (ZCN/V and ZBN/V) the fastening screws of the front plates must be removed. In the case of MONORAIL MR, front plates should only be removed from the carriage for a replacement and the carriage should not be moved after removing the front plate.

- Always use an MRM assembly guide rail for rolling carriages on an off the guide rail.

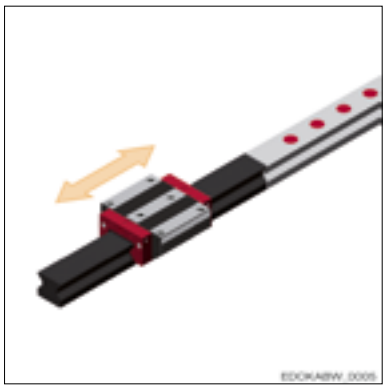

Additional information can be found in the MONORAIL and AMS installation instructions.

Additional wipers

Due to the flexibility of the additional wipers, they can be pulled over the top of the rail after removing the fixing screws. Installation is carried out in exactly the same way by putting it over the guide rail cross section or by driving over the guide rail end. As a result additional wipers can also be installed retrospectively, e.g. in the case of carriages on which the cross wipers of the front plate are closed and the carriages for replacement cannot be removed from the guide rail. Before tightening the screws, align the wiper using the centring cone on its back and ensure it is seated evenly. For the maximum tightening torque of screws, see the table section Permissible screw tightening torques.

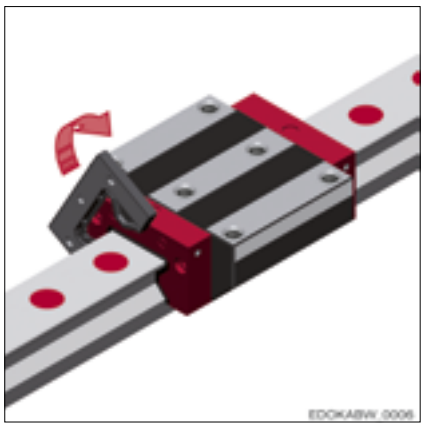

Metal wipers

When replacing, undo the screws on the front plate and pull off the wiper at the end of the rail. Mount a new metal wiper over the guide rail end.
To ensure reliable operation, the metal wipers require a consistent gap around the guide rail profile. This needs to be set during installation. For this purpose losely fix the fastening screws ensuring that the wiper can still be moved. Set the gap with a feeler gauge or similar device. Hold the metal wiper and tighten the fastening screws. For maximum torque, see table in the section Permissible screw tightening torques. Check the gap again after tightening the screws.

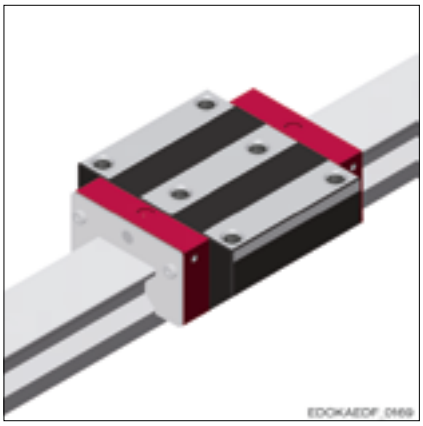

MONORAIL MR front plates

In the case of the front plates, the screw connection is undone and the front plate is pulled axially from the guide rail. The carriage should not be pushed in the process. Installation takes place in reverse order. When tightening fastening screws, observe maximum tightening torque in accordance with the section Permissible screw tightening torques.

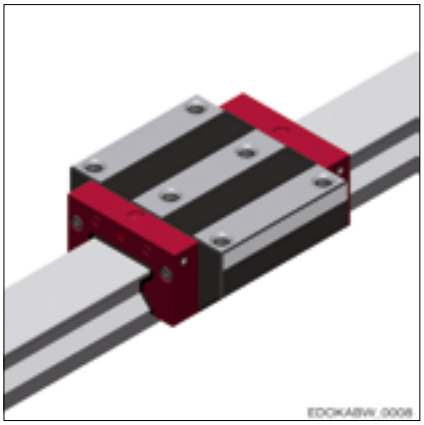

MONORAIL BM front plates

In the case of MONORAIL BM, only the cross wipers in the front plate should be replaced. After driving the carriage off the guide rail using an assembly guide rail, the cross wipers can be pulled off downwards from the front plate housing. Insert new cross wipers into the guideway groove until the wiper audibly snaps into place. Then remount the carriages on to the guide rail.

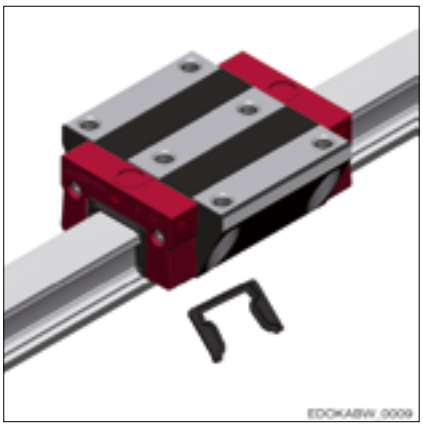

Permissible screw tightening torques

Caution

Component damage due to the reusing of fastening screws several times

- Do not re-use fastening screws several times.
- The screws are equipped with threadlocker. Its adhesion deteriorates when screwed in and out on numerous occasions, which can lead to unwanted loosening of the screws in operation.

See the table below for the maximum tightening torques for fastening screws for the front plates and additional wipers.

Maximum front plate tightening torque (Nm)

MONORAIL BM	Size	M_{Anz}
	BM 15	0.5
	BM 20 – BM 35	0.9
	BM 45	1.2
MONORAIL MR	MR 25 – MR 35	1.3
	MR 45	1.5
	MR 55 – MR 100	2.2

9.2.1 Environmental conditions

The widest variety of environmental conditions occur for SCHNEEBERGER MONORAIL guideways from the large number of possible applications influencing the characteristics and service life of the guideway:

- Contamination of the carriages due to swarf and dust can be prevented by using additional wipers thereby increasing the operating period in dirty environments.
- When using coolants there is a risk that they wash out the lubricant from the guideway causing inadequate lubrication. This can also be successfully mitigated by additional wipers. Coolants can damage synthetic components due to chemical reactions or have a detrimental influence on the lubricant causing it, for example, to agglutinate.
- Moisture can drip onto the guide rails and carriages and lead to corrosion on metal components. This is prevented by the use of non-corrosive materials or corrosion-inhibiting coatings. SCHNEEBERGER offers a variety of hard chromium coatings and products in a stainless steel design.
- Temperatures outside the provided operating temperature result in changing the viscosity of the lubricating oil, which in the worse case scenario can lead to a break in the lubricating film Otherwise the mechanical characteristics of the plastics being used are only guaranteed within specific temperature limits. Another point are changes in length that occur in components in case of temperature variations. Differences in temperature between machine components can thus lead to stresses between guide rails and carriages due to different thermal expansion and cause high additional forces.

9.2.2 Operating conditions

- Inadequate lubrication leads to premature failure of the guideways. It is therefore important to ensure adequate and appropriate lubrication during operation of the linear guideway.
- Another parameter is the travelling speed, which should be within the specified limits. If it is permanently exceeded, the synthetic components in the recirculating units can be damaged.
- Short-stroke applications, where in a normal stroke not all the rolling elements enter the load zone, require special measures in terms of lubrication.
- Oscillations, vibrations and shock loads also reduce service life and need to be taken into consideration in their design due to corresponding factors.

9.2.3 Installation of the guideway

- The attainable service life is significantly influenced by the design configuration of the installation space and the arrangement of the guideway. These should be arranged so that the guideway itself as well as an integrated distance measuring system are protected as best as possible against the influence of dust, swarf and coolants. This includes the fact that measuring systems are basically fitted on the side pointing away from the working area. See Section 4.8 - Arrangement of the guideway.
- Another aspect is the accuracy of the connecting structure. Machine beds or stands can generate significant additional forces on the guideways due to deviations from the specified geometry, which in turn reduces service life.
- During installation of the guideways, constraining forces can occur due to poor alignment of components, which lead to a reduction in service life.

To maintain optimum operation of SCHNEEBERGER MONORAIL guideways over their entire service life, the following points need to be taken into account:

- Precision components are used in all SCHNEEBERGER guideways, which are preserved and packaged in the factory to optimal specifications. The systems need to be protected against impacts and humidity during transportation and storage.
- Instructions for transportation and installation are included with the measuring systems ,which need to be observed.
- Installation of the guideways and the covering of the holes in the rails must be carried out by qualified staff. Instruction on installation are available from the Download area at www.schneeberger.com.
- The guideways should be adequately supplied with a lubricant adapted to a movement and load profile as well as the environmental conditions. In selecting a lubricant, we recommend that you contact a lubricant manufacturer directly. Lubrication recommendations can otherwise be obtained from www.schneebergers.com.
- The compatibility of coolants and lubricants needs to be checked by the user prior to commissioning to exclude the possibility of causing any negative influence on the guideway.
- The guideways should be protected from contamination, hot swarf and direct contact with coolants through covers or a suitable installation position.
- If the incidence of dirt or contact with coolant is expected during the operating phase of products, additional wipers should always be used. The functionality of these components over time is guaranteed by appropriate inspection intervals. Information on these products can be found at www.schneeberger.com.
- If the guideways come into contact with hot swarf, the use of metal wipers is also recommended. Information on these products can be found at www.schneeberger.com.
- The front wipers and the additional wipers for the MONORAIL carriages must be analysed at regular intervals for wear and replaced, where necessary.
- DIN 637 should always be observed when operating and dimensioning MONORAIL guideways. Furthermore DIN 637 is always valid even if contradictory statements are encountered within the DIN 637 document.

9.4.1 Objectives and sequence

With its 24-hr delivery service, SCHNEEBERGER offers the option of ordering MONORAIL guideways and AMS distance measuring systems as spare parts, e.g during a machine shut-down, at very short notice. To achieve this SCHNEEBERGER maintains its own semi-finished product warehouse of carriages, reading heads, guide rails and guide rails with integral scale.
Enquiries and orders can be addressed directly to SCHNEEBERGER when required:

- Telephone No. +49 7081 782 0 for enquiries to the 24-hr Service Department, working days from 7.30am to 5pm.
- Fax-No. +49 7081 782 124 for orders
- Orders by post to the Service Department quoting "Priority order for 24-hr Service Department".

Orders for goods available from stock received before 10am can generally be dispatched on the same day. Orders received later are delivered within 24 hours.

9.4.2 Products

SCHNEEBERGER offers a limited range of standard products for delivery as part of its 24-hr service. This includes:

- MONORAIL MR
  - Guide rail type: N, Standard; C, Cover strip
  - Carriage type: A, B, C and D
  - Size: 25-65
  - Accuracy class: G0
  - Preload: Average between V2 and V3
- MONORAIL BM
  - Guide rail type: N (ND), Standard; C, Cover strip
  - Carriage type: A, B, C, D, E, F and G
  - Size: 15-45
  - Accuracy class: G0
  - Preload: Average between V2 and V3
- MONORAIL AMS
  - Guide rails with integral distance measuring system, accuracy class G0
  - Reading heads type AMS30, AMSA 3B, AMSD 3B, AMSA 4B and AMSD 4B

Reading heads for older products and special guide rails on request.
Detailed information on the products that can be supplied and prices can be obtained on request.

www.schneeberger.com

www.schneeberger.com/contact

PROSPECTUSES

COMPANY BROCHURE
CUSTOMIZED BEARINGS
GEAR RACKS
Linear bearings and Recirculating units
MINERAL CASTING SCHNEEBERGER
MINISLIDE MSQscale
MINI-X MINIRAIL / MINISCALE PLUS / MINISLIDE
MONORAIL and AMS profiled linear guideways with integrated measuring system
MONORAIL and AMS application catalog
POSITIONING SYSTEMS

www.schneeberger.com

SCHNEEBERGER

AM Precision

A.MANNESMANN
A member of
SCHNEEBERGER linear technology